ORDER NO. HAD83122692C8-19

Service Manual

Cassette Deck

RS-B78R

(Silver Face / Black Face)

dbx/Dolby B-C NR, Auto-Reverse Cassette Deck

DOLBY B•C NR

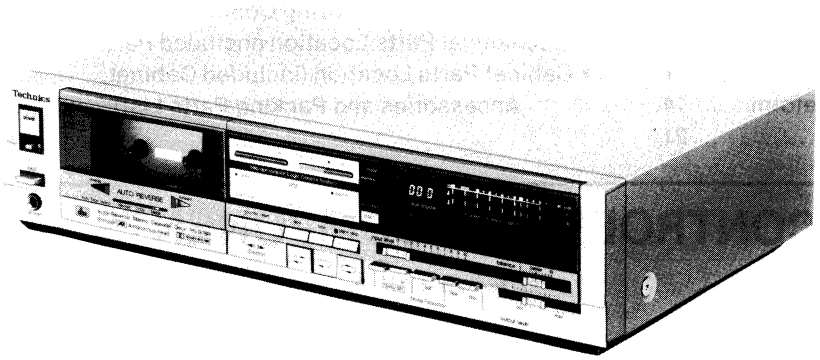

This is the Service Manual for the following areas.

D ...For all European areas except United Kingdom.

B ...For United Kingdom.

N ...For Asia, Latin America, Middle East and Africa areas.

A ...For Australia.

RS-8R MECHANISM SERIES

Specifications

Track system: 4-track 2-channel stereo recording and playback

Tape speed: 4.8cm/s

Wow and flutter: 0.045% (WRMS), ±0.14% (DIN)

Frequency response:
- Metal tape; 20~20,000Hz / 30~19,000Hz (DIN) / 40~18,000Hz ±3dB
- CrO_2 tape; 20~19,000Hz / 30~18,000Hz (DIN) / 40~17,000Hz ±3dB
- Normal tape; 20~18,000Hz / 30~17,000Hz (DIN) / 40~16,000Hz ±3dB

Dynamic range: 110dB (at 1kHz) with dbx* in

Max. input level improvement: 10dB or more improved with dbx in (at 1kHz)

Signal-to-noise ratio: dbx in; 92dB (A weighted)
Dolby** C NR in; 75dB (CCIR)
Dolby B NR in; 68dB (CCIR)
NR out; 58dB (A weighted)
(Signal level = max. input level CrO_2 type tape)

Fast forward and rewind time: Approx. 90 seconds with C-60 cassette tape

Inputs: MIC; sensitivity 0.25mV, applicable microphone impedance 400Ω~10kΩ
LINE; sensitivity 60mV, input impedance 47kΩ or more

Outputs: LINE; output level 700mV, output impedance 800Ω or less
HEADPHONES; output level 125mV (at 8Ω) applicable headphone impedance 8Ω~600Ω

Bias frequency: 80kHz

Heads: 1-AX (AMORPHOUS) head for rec/playback
2-double-gap ferrite head for erasure

Motor: 3-motor system
One for capstan drive (Electrical governor motor)
One for reeltable drive (DC motor)
One for mechanism drive (DC motor)

Technics

Matsushita Electric Trading Co., Ltd.
P.O. Box 288, Central Osaka Japan

ORDER NO. HAD83122692C8-19

Service Manual

Cassette Deck

RS-B78R

(Silver Face
Black Face)

dbx/Dolby B-C NR, Auto-Reverse Cassette Deck

DOLBY B-C NR

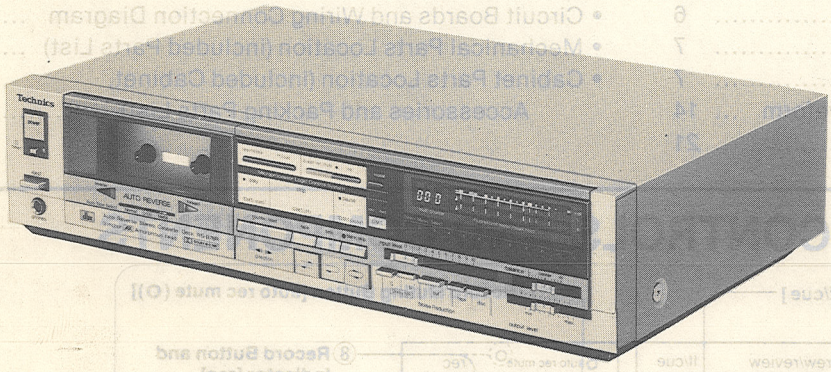

This is the Service Manual for the following areas.

D ...For all European areas except United Kingdom.

B ...For United Kingdom.

N ...For Asia, Latin America, Middle East and Africa areas.

A ...For Australia.

RS-8R MECHANISM SERIES

Specifications

Track system: 4-track 2-channel stereo recording and playback

Tape speed: 4.8cm/s

Wow and flutter: 0.045% (WRMS), ±0.14% (DIN)

Frequency response:
- Metal tape; 20~20,000Hz / 30~19,000Hz (DIN) / 40~18,000Hz ±3dB
- CrO_2 tape; 20~19,000Hz / 30~18,000Hz (DIN) / 40~17,000Hz ±3dB
- Normal tape; 20~18,000Hz / 30~17,000Hz (DIN) / 40~16,000Hz ±3dB

Dynamic range: 110dB (at 1kHz) with dbx* in

Max. input level improvement: 10dB or more improved with dbx in (at 1kHz)

Signal-to-noise ratio:
- dbx in; 92dB (A weighted)
- Dolby** C NR in; 75dB (CCIR)
- Dolby B NR in; 68dB (CCIR)
- NR out; 58dB (A weighted)
- (Signal level = max. input level CrO_2 type tape)

Fast forward and rewind time: Approx. 90 seconds with C-60 cassette tape

Inputs:
- MIC; sensitivity 0.25mV, applicable microphone impedance 400Ω~10kΩ
- LINE; sensitivity 60mV, input impedance 47kΩ or more

Outputs:
- LINE; output level 700mV, output impedance 800Ω or less
- HEADPHONES; output level 125mV (at 8Ω) applicable headphone impedance 8Ω~600Ω

Bias frequency: 80kHz

Heads:
- 1-AX (AMORPHOUS) head for rec/playback
- 2-double-gap ferrite head for erasure

Motor: 3-motor system
- One for capstan drive (Electrical governor motor)
- One for reeltable drive (DC motor)
- One for mechanism drive (DC motor)

Technics

Matsushita Electric Trading Co., Ltd.
P.O. Box 288, Central Osaka Japan

Power requirements: AC; 110/125/220/240V, 50-60Hz
[D]...Pre-set power voltage 220V
[B][N][A]...Pre-set power voltage 240V

Power consumption: 25W
Dimensions: 43cm(W)×9.8cm(H)×27.3cm(D)
Weight: 5.3kg

Design and specifications are subject to change without notice.
* The term dbx is a registered trademark of dbx Inc.
** 'Dolby' and the double-D symbol are trademarks of Dolby Laboratories Licensing Corporation.

CONTENTS

ITEM	PAGE
• Location of Controls and Components	2
• Operating Instruction	3
• Disassembly Instructions	4
• Precautions in Disassembly and Reassembly	6
• Precautions for Parts Replacement	6
• Replacing Rotary Head Assembly	7
• Measurement and Adjustment Methods	7
• Microcomputer Terminal Function and Waveform	14
• Block Diagram	21
• Schematic Diagram (for Main/FL meter Section)	24
• Schematic Diagram (for Mechanism/ Mechanism Control Section)	28
• Electrical Parts List	30
• Circuit Boards and Wiring Connection Diagram	33
• Mechanical Parts Location (included Parts List)	36
• Cabinet Parts Location (included Cabinet, Accessories and Packing Parts List)	37

LOCATION OF CONTROLS AND COMPONENTS

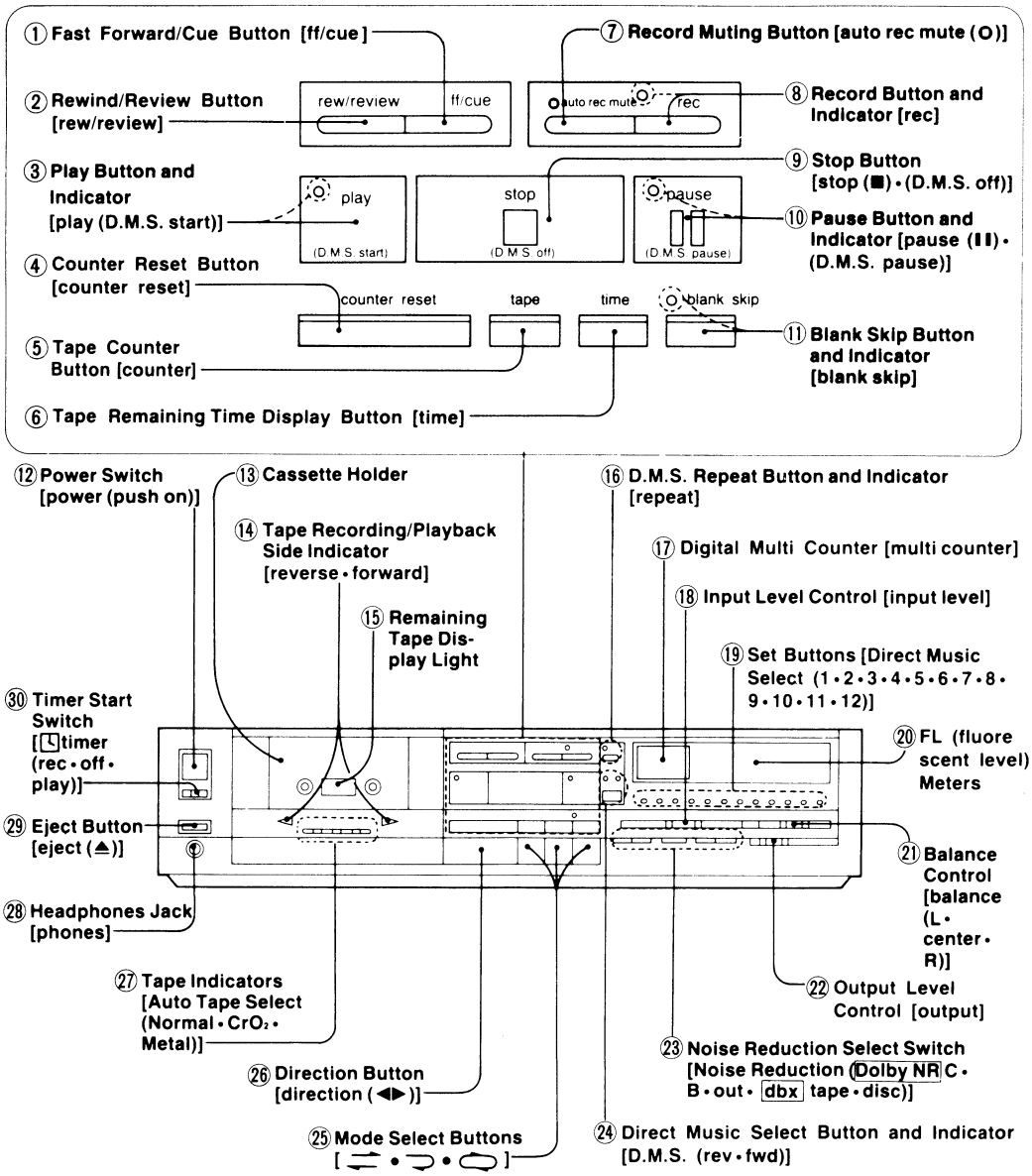

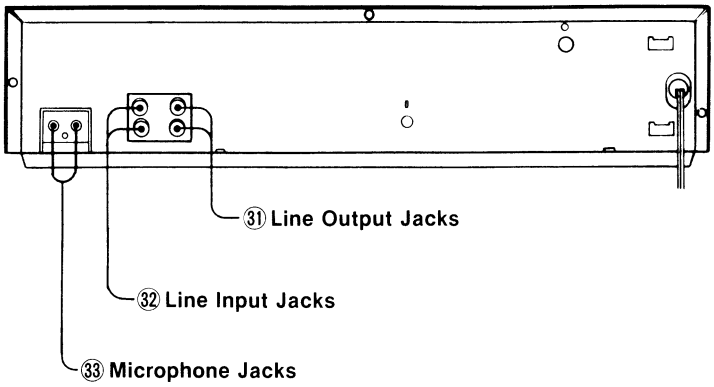

OPERATING INSTRUCTION

About direct music select function

After searching for the beginning of your desired programs, the unit will begin playback automatically.

1. Select the playback side

Each time the Direct Music Select Button is pressed, the unit will switch between forward and reverse playback. (The Forward or Reverse Indicator will light in the respective modes).

2. Select the programs

Press the Set Buttons of the programs you wish to hear (the buttons pressed will light).

- Programs are always counted from the beginning of the tape, first program, second program...etc.
- If the first program is set, the tape will automatically rewind to the beginning and enter the stop mode.
- If a button is pressed by mistake, pressing it once more will release it (its light goes out).

To listen to the 5th, 9th, and 2nd programs from the tape's beginning:

Press Set Button 5, 9, and 2 in that order.

To listen to set programs repeatedly:

If the D.M.S. Repeat Button is pressed, the set programs will be played back repeatedly (the D.M.S. Repeat Indicator will light, indicating that the D.M.S. repeat function is operating).

3. Begin playback

When the Play Button is pressed, the set programs will begin playback. (Programs not set will be skipped over automatically by the fast forward and rewind functions).

To cancel direct music select:

Press the Stop Button.

To cancel D.M.S. repeat:

Press the D.M.S. Repeat Button once again (the D.M.S. Repeat Indicator goes out).

Notes:

- During D.M.S. repeat playback, the unit will playback repeatedly a maximum of 16 times unless the Stop Button is pressed earlier.
- Playback in the direct music select mode is in the order in which the Set Buttons are pressed.
- Use the cassette tape's index card to note the names and order of programs recorded; this makes use of the Set Buttons more convenient.
- This may not operate correctly with the following kinds of tape: programs with passages of extremely low volume level, music tapes with non-recorded passages, recordings with sections of fade-in or fade-out recording.
- Unrecorded blanks of about 4 seconds in length between the program must be created in order for the music selector function to work properly.
  The function may not work if the blanks are too short.
  The function may not work properly with prerecorded music tapes which have passages where the sound level is particularly low or which have passage of unrecorded sound.
- In cases such as classic music, when a low level of sound continues in the program.
- Do not use pause between music pieces during D.M.S. operation. (This may cause erroneous operation for counting of the number of music pieces.)
- On a music tape to be played back with direct music select, there has to be an unrecorded space of at least four seconds between the end of the last tune on the tape and the beginning of the leader tape; if there is not, an operational error may occur.
- Additional settings of song numbers not yet used can be made while D.M.S. playback is in progress.
  However, numbers of songs already played-back by D.M.S. should not be re-entered diring D.M.S. playback because the next D.M.S. song number will be cancelled each time the select key of a previously played song is pressed.
- Do not cancell D.M.S. playback during about the first 8 seconds of a song to prevent an erroneous operation when D.M.S. playback is used again.
- Check the total number of songs an a cassette before entering song numbers for D.M.S. playback.
  If a non-existent song number is entered (for example, song 6 for a cassette side having only 5 songs), the D.M.S. function may not operate properly.
  If this occurs, press the stop Button.

DISASSEMBLY INSTRUCTIONS

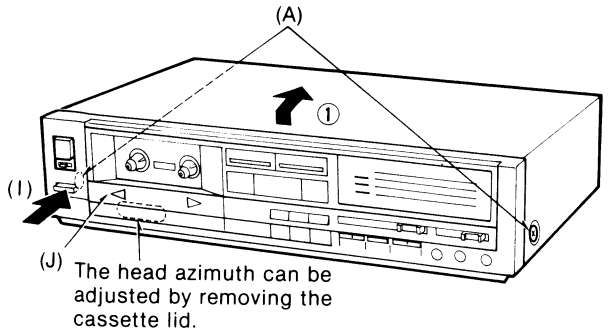

Fig. 1

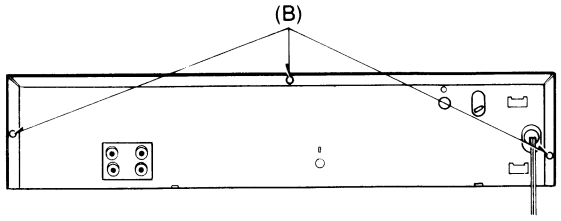

Fig. 2

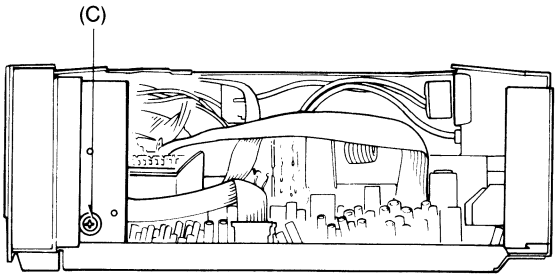

Fig. 4

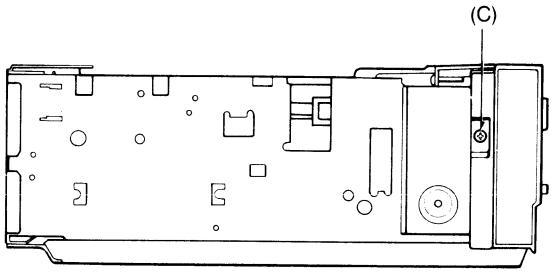

Fig. 5

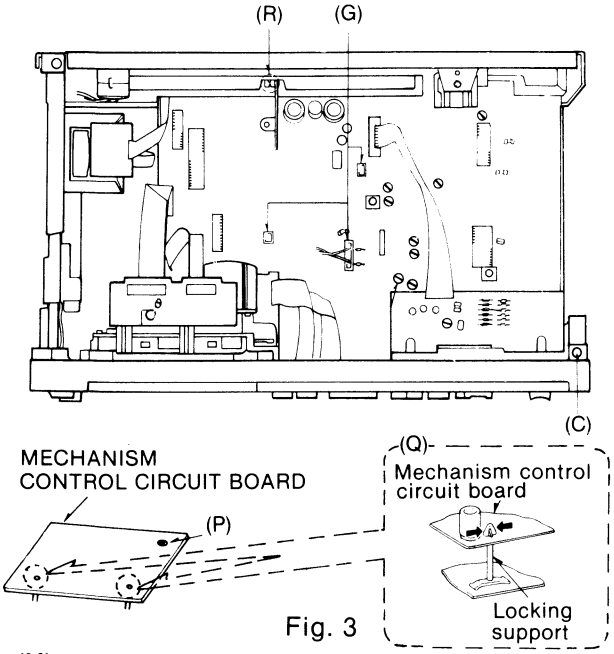

Fig. 3

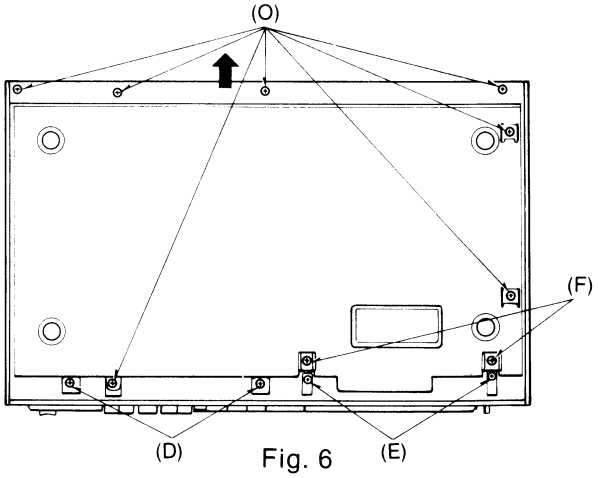

Fig. 6

(H) How to remove flat cable

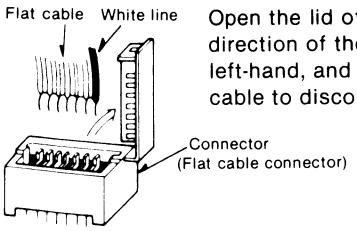

Open the lid of connector in the direction of the arrow as shown left-hand, and extract the flat cable to disconnect.

(R) How to remove nylon rivet

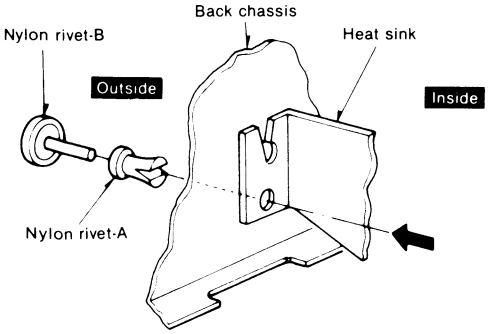

To remove a heat sink from the back chassis, first press nylon rivet-A from the inside in the direction indicated by the arrow as shown above, and extract the rivet to the outside. Next remove nylon rivet-B from the outside. Consequently, the heat sink can be removed from the back chassis.

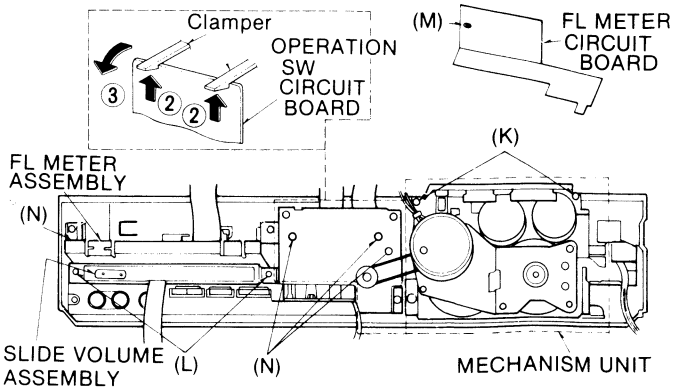

Fig. 7

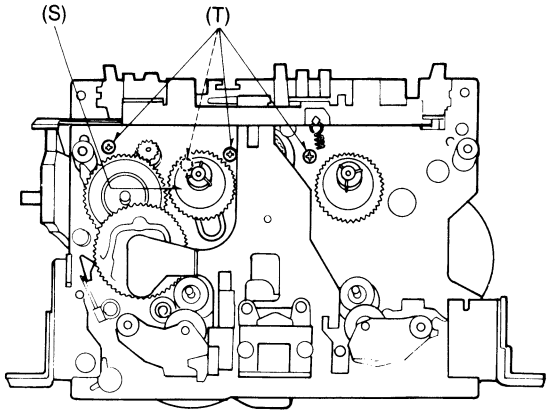

Fig. 8

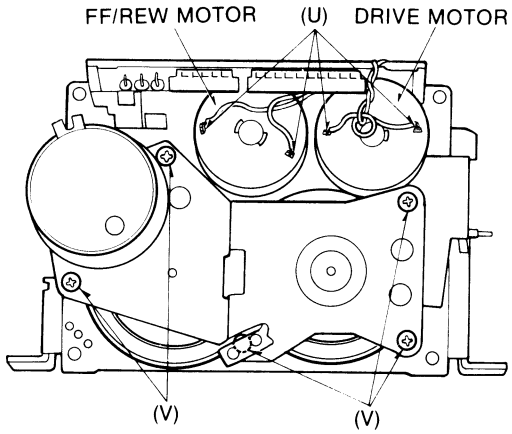

Fig. 9

Ref. No.	Procedure	To remove —.	Remove —.	Shown in fig. —.
1	1	Case cover	• 2 ornament screws .....(A) • 3 screws .....(B) • As shown in fig. 1, pull case cover in the direction of arrow ①.	1 2 1
2	1 → 2	Front panel assembly and mechanism unit	• 3 screws .....(C) • 2 screws .....(D) • 2 screws .....(E) • 2 screws .....(F) • Pull out the connectors A B F G H N O P Q R W 1 .....(G) • How to remove flat cable .....(H)	3, 4, 5 6 6 6 3 3
3	1 → 3	Mechanism unit	• Push the eject button .....(I) • Cassette lid .....(J) • 2 screws .....(E) • 2 screws .....(F) • 2 screws .....(K)	1 1 6 6 7
4	1 → 4	Slide volume assembly	• 2 screws .....(L)	7
5	1 → 4 → 5	FL meter circuit	• 1 screw .....(M) • 4 screws .....(N) • As shown in fig. 7, raise the clamper in the direction of arrow ② and remove the FL meter circuit in the direction of arrow ③.	7 7 7
6	6	Bottom cover	• 2 screws .....(D) • 2 screws .....(F) • 7 screws .....(O) • Slide the bottom cover in the direction arrow ④ and remove it.	6 6 6 6
7	1 → 6 → 7	Mechanism control circuit board	• 1 screw .....(C) • 1 screw .....(P) • How to remove flat cable .....(H) • Remove the locking support from the board while pushing its tip in the direction of arrow. .....(Q)	4 3 3 3
8	1 → 6 → 7 → 8	Main circuit board	• How to remove nylon ribet .....(R)	3
9	1 → 3 → 9	FF/REW motor and driver motor	• Remove the reel table .....(S) • 4 screws .....(T) • Un solder the soldered portion of the FF/REW motor terminal and driver motor terminal .....(U)	8 8 9
10	1 → 3 → 10	Capstan motor	• 5 screws .....(V)	9

PRECAUTIONS IN DISASSEMBLY AND REASSEMBLY

Removing the Mode Select Button

The Mode Select Buttons are press-fit with the Button Bushings, as shown in Fig. 10, with the Front Panel Assembly and Button Springs between them. Remove the Button Bushings using pliers to disassemble these parts. Be careful not to lose the Button Springs as they will pop out.

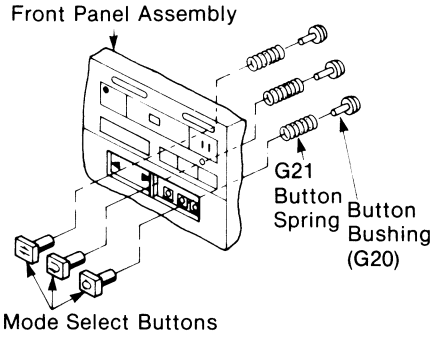

Fig. 10

Reassembling the Mechanism Unit

1. For repair, measurement or adjustment with the mechanism removed from the unit be sure to ground the lower base plate of the mechanism.
   For grounding, connect a extension cord to the mechanism's lower base plate and the lug terminal from amplifier printed circuit board.
   Without grounding, the mechanism does not operate properly. (Refer to Fig. 11).

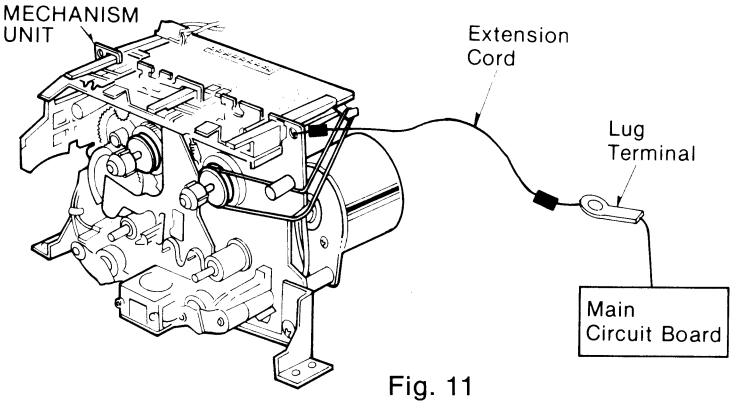

Fig. 11

PRECAUTIONS FOR PARTS REPLACEMENT

Replacement of the Blank Skip/Time/Tape, Counter Reset and DMS (1—12) Buttons.

The Blank Skip, Time Count and Tape Count Buttons are a one-piece resin molded part (It is supplied as a single part.).
As shown in Fig. 1, this buttons are fixed in such a manner that the Front Panel Assembly is sandwiched between the Ornament Plate (G5-1) and the buttons and five pins (A) are melted by heat. (Five pins (B) are used to fix the Ornament Plate. Refer to Fig. 2.)
To remove this part, first, remove the two lugs on the Ornament Plate from the Front Panel. Then, while pulling part (C) of the Ornament Plate toward the front, heat the ten pins (A) and (B) with a soldering iron. (Refer to the Fig. 2.)
When the button retainer plate is removed at this time, buttons DMS 1 to 12 can be replaced.
As mentioned above, this part is fixed by melting the pins by heat, both the Ornament Plate and button must be replaced when replacement is required.

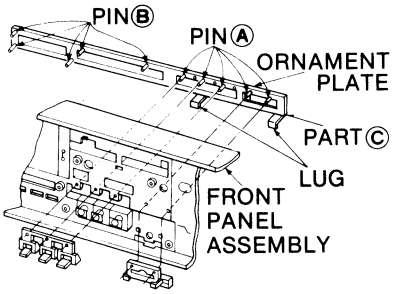

Fig. 1

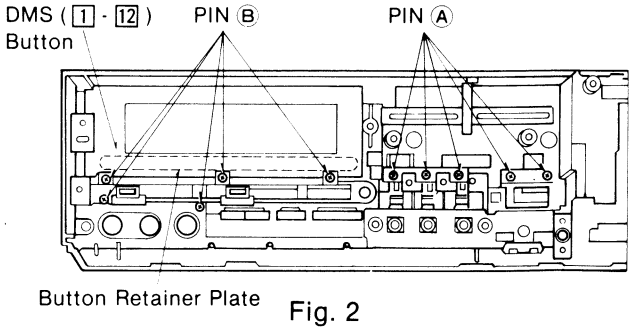

Fig. 2

Replacement of Parts on the Keyboard Circuit

To replace the parts on the keyboard circuit, first, remove the eight screws (F), and then desolder two terminals (G) of LED's (D519). The Operation Chassis can then be removed from the Base Plate and the parts be replaced.
(Refer to Fig. 3).

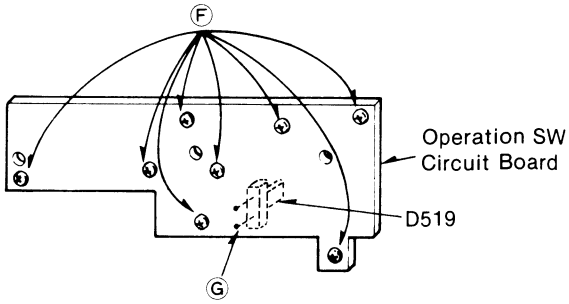

Fig. 3

REPLACING ROTARY HEAD ASSEMBLY

Considerations in mounting the rotary head assembly

1. This recorder requires a record/playback head of extremely precise head height. In replacing the rotary head, install a factory-adjusted full rotary head assembly.
   [Never attempt to disassemble the rotary head assembly by removing screws (A).]
2. In installing the replacement rotary head assembly, make certain that the change gear is placed at location (B) on the change rod. (See Fig. 1.)
3. Trace the record/playback head lead-wire as follows (Refer to Fig. 2.):
   - Set the record/playback head in its forward stop direction.
   - At this time, hook the head wire to the clamper of the pinch roller R, and press the head wire in the direction of the arrow as shown in Fig. 2 so that it is bent approximately 90 degrees. Then secure the wire on the mechanism unit using a cord clamper.

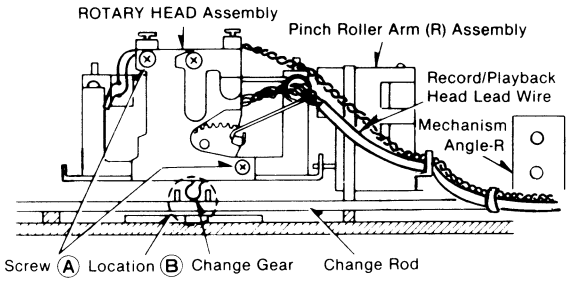

Fig. 1

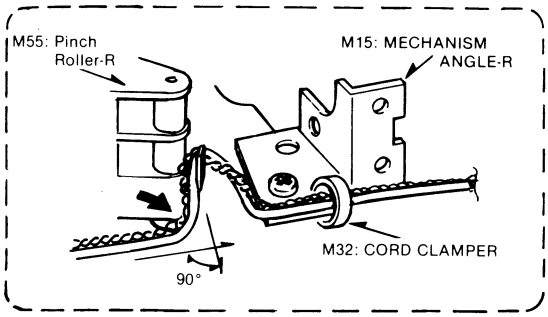

Fig. 2

MEASUREMENT AND ADJUSTMENT METHODS

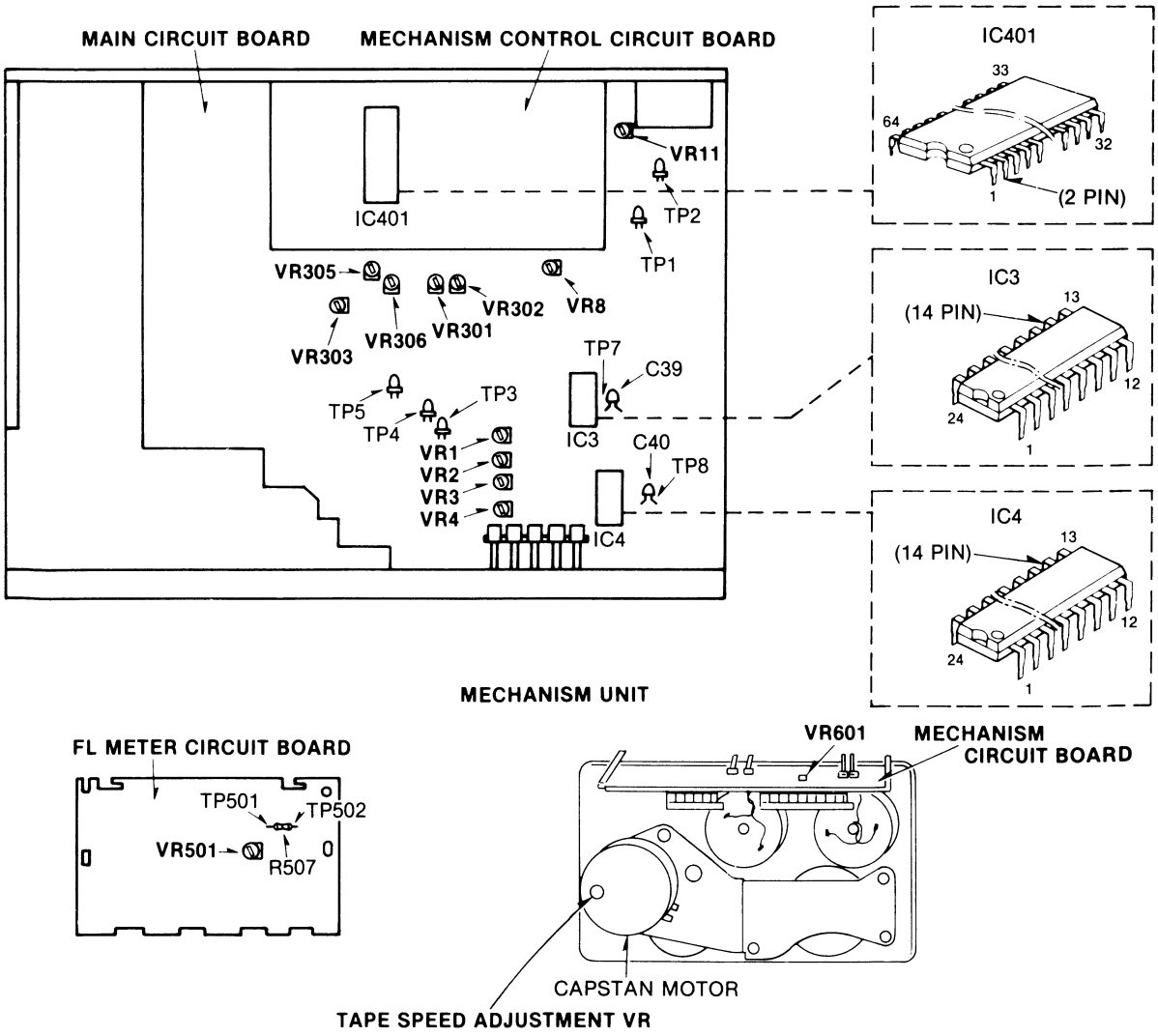

Fig. 1

NOTES: Set switches and controls in the following positions, unless otherwise specified.

- Make sure heads are clean
- Make sure capstan and pressure roller are clean
- Judgeable room temperature 20±5°C (68±9°F)
- NR switch: OUT
- Timer start switch: OFF
- Balance control: Center
- Input level control: Maximum
- Output level control: Maximum
- Mode switch: ⊂⊃ mode
- Blank skip switch: OFF
- Music select switch: OFF
- Music repeat switch: OFF

Ⓐ Head adjustment

Condition:
- Playback mode (Forward • Reverse)
- Normal tape mode

Equipment:
- VTVM
- Oscilloscope
- Test tape (azimuth)...QZZCFM
- Test tape .....QZZCRD

HEAD HEIGHT ADJUSTMENT

1. Turn the erase head height adjustment screws on the rotary head assembly counterclockwise until the upper end face of the erase heads is aligned on the same plane as the top face of their respective guide pins. (Refer to figs. 2 and 3.)
2. Put a point ink-mark on the head of each adjustment screw.
3. With the marks as guides, turn the erase head height adjustment screw 3.2 turns clockwise.
4. Install a test tape (tape with mirror: QZZCRD) on the recorder; place the recorder in the FORWARD PLAY mode. Make fine adjustments of the erase head height as necessary, to attain on the record/playback head face the tape position shown in fig. 4.
5. Run the tape in the forward play mode and check it for zigzag running. (Shown in fig. 4)
   If zigzag tape running occurs, repeat step 4.
6. Place the recorder in the reverse play mode and perform the above steps 4 and 5.
7. Repeat steps 5 and 6 two or three times and verify that the tape position shown in fig. 4 is ensured.

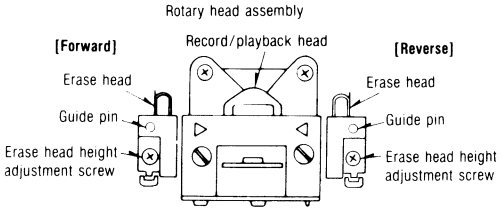

Fig. 2

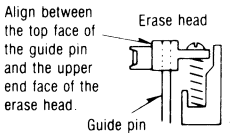

Fig. 3

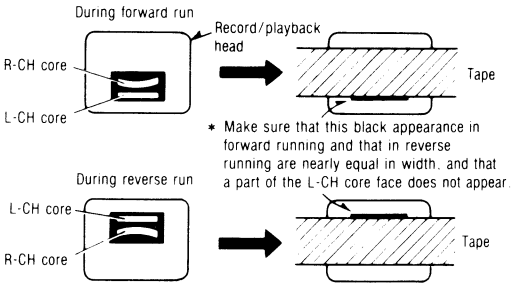

Fig. 4

L-CH/R-CH output balance adjustment

8. Make connections as shown in fig. 5.
9. In the forward playback mode, playback the 8kHz signal from the test tape (QZZCFM).
   Adjust the azimuth screw (Forward) shown in fig. 6 for maximum output L-CH and R-CH levels.
   When the output levels of L-CH and R-CH are not at maximum at the same point adjust as follows.
10. Turn the azimuth screw (Forward) shown in fig. 6 to find angles A and C (points where peak output levels for left and right channels are obtained). Then, locate angle B between angles A and C, i.e., point where L-CH and R-CH outputs are balanced. (Refer to figs. 6 and 7.)
11. In the reverse playback mode, adjust the azimuth screw (reverse) in the same way described above.

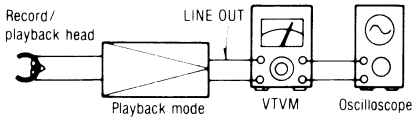

Fig. 5

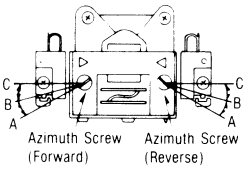

Fig. 6

L-CH/R-CH phase adjustment

12. Make connections as shown in fig. 8.
13. In the forward playback mode, playback the 8kHz signal from the test tape (QZZCFM). Adjust the azimuth screw (Forward) shown in fig. 6 so that pointers of the two VTVMs swing to maximum and a lissajous waveform as illustrated in fig. 9 is obtained on the oscilloscope.
14. In the reverse playback mode, adjust the azimuth screw (reverse) in the same way described above.

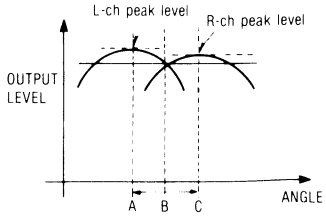

Fig. 7

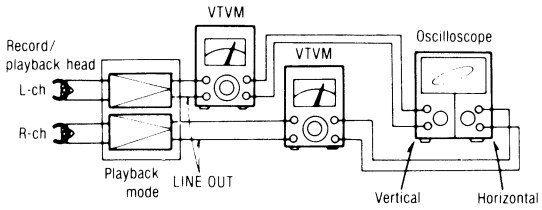

Fig. 8

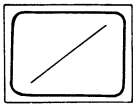

Fig. 9

Checking the difference in level between forward and reverse running

15. Reproduce the playback level adjustment signal (315Hz at 0dB) on the standard playback adjustment tape; and check that the difference between the level in forward running and that in reverse running is within 1.0dB.
16. After adjustment, lock the erase head height and angle adjustment screws.

Head Height Adjustment using the Head Adjustment Jig (QZZ0207)

The head adjustment jig (QZZ0207) enables accurate, speedy head height adjustment in the following manner.

a. Place the plate onto the mechanism.
b. Set the mechanism to the PLAY mode.
c. Place the check bar onto the plate.
d. Pass the check bar through each erase head.
e. Adjust the height screw so that the check bar does not touch any of the erase heads.
f. Run a mirror tape (QZZCRD) and check to see that the tape does not touch (twist arround, etc.) the erase heads.
g. After that, adjust items 4 thru 13 in the adjustment procedure.

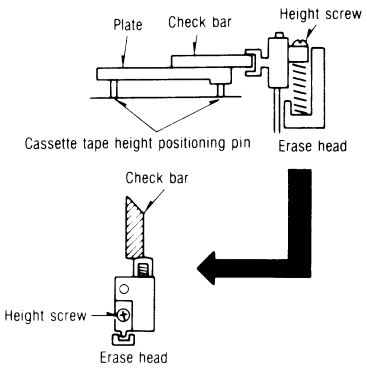

Ⓑ Takeup torque

Condition:
- Playback mode

Equipment:
- DC voltmeter
- Test tape...QZZSRKCT

1. Set the test tape (or RT-60) into the cassette holder.
2. Adjust the takeup torque adjusting potentiometer VR601 in the forward playback mode for 3.5 volts between the FF/REW motor terminals.
3. Run the QZZSRKCT takeup torque measurement tape in the forward playback mode and check that the torque is within quoted tolerance.

Standard value: 50±10gr-cm

Ⓒ Tape speed

Condition:
- Playback mode

Equipment:
- Digital frequency counter
- Test tape...QZZCWAT

Tape speed accuracy

1. Test equipment connection is shown in fig. 10.
2. Playback test tape (QZZCWAT 3,000Hz), and supply playback signal to the digital frequency counter.
3. Measure this frequency.
4. On the basis of 3,000Hz, determine value by following formula:

$$\text{Tape speed accuracy} = \frac{f-3{,}000}{3{,}000} \times 100(\%) \qquad \text{where, } f = \text{measured value}$$

5. Take measurement at middle section of tape.

Standard value: ±1.5%

6. If measured value is not within the standard value, adjust it by using the tape speed adjustment VR shown in Fig. 1.

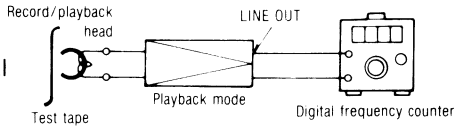

Fig. 10

Tape speed fluctuation

Make measurements in same manner as above (beginning, middle and end of tape), and determine the difference between maximum and minimum values and calculate as follows:

$$\text{Tape speed fluctuation} = \frac{f_1-f_2}{3{,}000} \times 100(\%) \qquad f_1 = \text{maximum value, } f_2 = \text{minimum value}$$

Standard value: Less than 1%

NOTE:

Please use non metal type screwdriver when you adjust tape speed on this unit.

Ⓓ Playback frequency response

Condition:
- Playback mode (Forward • Reverse)
- Normal tape mode

Equipment:
- VTVM
- Oscilloscope
- Test tape...QZZCFM

1. Test equipment connection is shown in fig. 5.
2. Playback the frequency response portion of test tape (QZZCFM).
3. Measure output level at 315Hz, 12.5kHz, 8kHz, 4kHz, 1kHz, 250Hz, 125Hz and 63Hz, and compare each output level with the standard frequency 315Hz, at LINE OUT.
4. Make measurements for both channels.
5. Make sure that the measured values are within the range specified in the frequency response chart. (Shown in fig. 11).

Playback frequency response (Forward • Reverse)

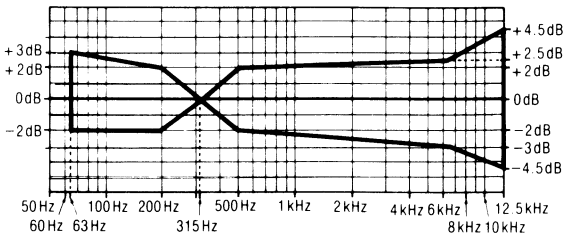

Fig. 11

Ⓔ Playback gain

Condition:
- Playback mode
- Normal tape mode
- Output level control...MAX.
- Balance control...Center

Equipment:
- VTVM
- Oscilloscope
- Test tape...QZZCFM

1. Test equipment connection is shown in fig. 5.
2. Playback standard recording level portion on test tape (QZZCFM 315Hz) and, using VTVM, measure the output level at test points [TP7 (L-CH), TP8 (R-CH)].
3. Make measurements for both channels.

Standard value: 0.42±0.05V [around 0.28V: at test points TP7 (L-CH) and TP8 (R-CH)

Adjustment

1. If the measured value is not within standard the adjust VR1 (L-CH) or VR2 (R-CH) (See fig. 1).
2. After adjustment, check "Playback frequency response" again.

Ⓕ Erase current

Condition:
- Record mode (Forward • Reverse)
- Metal tape mode

Equipment:
- VTVM
- Oscilloscope

1. Test equipment connection is shown in fig. 12.
2. Place UNIT into metal tape mode.
3. Press the record and pause buttons.
4. Read voltage on VTVM and calculate erase current by following formula:

$$\text{Erase current (A)} = \frac{\text{Voltage across resistor R201}}{1\ (\Omega)}$$

Standard value: 155±15mA (Metal)

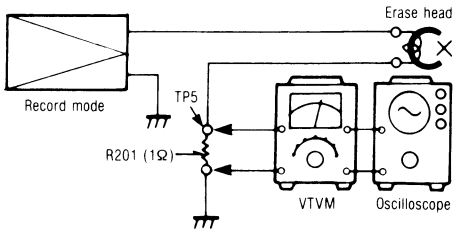

Fig. 12

Adjustment

- If the measured value is not within standard value, adjust VR305 (Forward) or VR306 (Reverse) (See fig. 1).

Ⓖ Overall frequency response

Condition:
- Record/playback mode (Forward • Reverse)
- Normal tape mode
- CrO_2 tape mode
- Metal tape mode
- Input level control...MAX
- Output level control...MAX
- Balance control...Center

Equipment:
- VTVM
- ATT
- AF oscillator
- Oscilloscope
- Resistor (600Ω)
- Test tape (reference blank tape)
  ...QZZCRA for Normal
  ...QZZCRX for CrO_2
  ...QZZCRZ for Metal

Note:
Before measuring and adjusting, the overall frequency response make sure of the playback frequency response (For the method of measurement, please refer to the playback frequency response).

(Recording equalizer is fixed)

1. Make connections as shown in fig. 13.
2. Place UNIT into normal tape mode and insert the normal reference blank test tape (QZZCRA).
3. Supply a 1kHz signal from the AF oscillator through ATT to LINE IN.
4. Adjust ATT so that input level is −20dB below standard recording level (standard recording level = 0 VU).
5. Adjust the AF oscillator frequency to 1kHz, 50Hz, 100Hz, 200Hz, 500Hz, 4kHz, 8kHz, 10kHz and 12.5kHz signals, and record these signals on the test tape.
6. Playback the signals recorded in step 5, and check if the frequency response curve is within the limits shown in the overall frequency response chart for normal tapes (fig. 14). (If the curve is within the charted specifications, proceed to steps 7, 8 and 9.)
   If the curve is not within the charted specifications, adjust as follows;

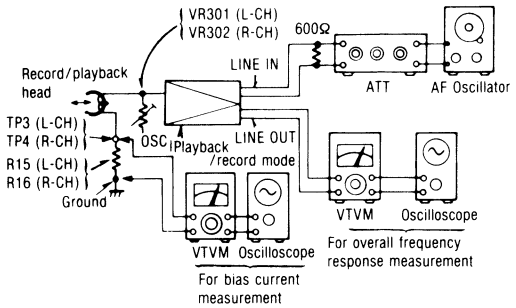

Fig. 13

Overall frequency response chart (Normal)

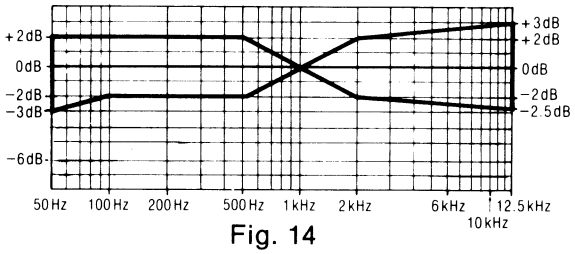

Fig. 14

Adjustment (A):
When the curve exceeds the overall specified frequency response chart (fig. 14) as shown in fig. 15.

1) Increase bias current by turning VR301 (L-CH) and VR302 (R-CH).
   (See fig. 1 on page 7.)
2) Repeat steps 5 and 6 for confirmation (Proceed to steps 7, 8 and 9 if the curve is now within the charted specifications as shown fig. 14.)
3) If the curve still exceeds the specifications (fig. 14), increase bias current further and repeat steps 5 and 6.

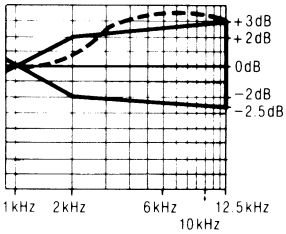

Fig. 15

Adjustment (B):
When the curve falls below the overall specified frequency response chart (fig. 14) as shown in fig. 16.

1) Reduce bias current by turning VR301 (L-CH) and VR302 (R-CH).
2) Repeat steps 5 and 6 for confirmation (Proceed to steps 7, 8 and 9 if the curve is now within the charted specification as shown fig. 14.)
3) If the curve still falls below the charted specifications (fig. 14), reduce bias current further and repeat steps 5 and 6.

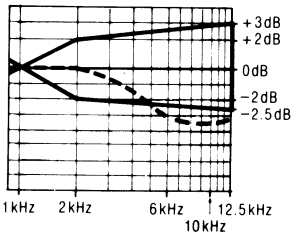

Fig. 16

7. Place UNIT into CrO_2 tape mode.
8. Change test tape to CrO_2 reference blank test tape (QZZCRX), and record 1kHz, 50Hz, 100Hz, 200Hz, 500Hz, 4kHz, 8kHz, 10kHz and 15kHz signals. Then, playback the signals and check if the curve is within the limits shown in the overall frequency response chart or CrO_2 tapes (fig. 17).
9. Place UNIT into metal tape mode and change test tape to metal reference blank test tape (QZZCRZ), and record 1kHz, 50Hz, 100Hz, 200Hz, 500Hz, 4kHz, 8kHz, 10kHz, 12.5kHz and 15kHz signals. Then, playback the signals and check if the curve is within the limits shown in the overall frequency response chart for metal tapes (fig. 17).

Overall frequency response chart (CrO_2, Metal)

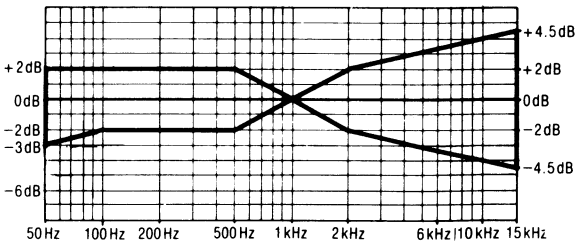

Fig. 17

10. Confirm that bias currents are approximately as follows when the UNIT is set at different tape mode.
    • Read voltage on VTVM between ground and test point (TP3 for L-CH, TP4 for R-CH) and calculate bias current by following formula:

$$\text{Bias current (A)} = \frac{\text{Value read on VTVM (V)}}{10\ (\Omega)}$$

	around 200μA (Normal position)
Standard value:	**around 250μA (CrO_2 position)**
	around 430μA (Metal position)

Ⓗ Overall gain

Condition:
- Record/playback mode (Forward • Reverse)
- Normal tape mode
- Input level control...MAX
- Output level control...MAX
- Balance control...Center
- Standard input level;

MIC .....-72^{+4}_{-2}dB

LINE IN .....-24^{+4}_{-2}dB

Equipment:
- VTVM
- AF oscillator
- ATT
- Oscilloscope
- Resistor (600Ω)
- Test tape (reference blank tape) ...QZZCRA for Normal

1. Test equipment connection is shown in fig. 18.
2. Insert the normal reference blank tape (QZZCRA).
3. Place UNIT into record mode.
4. Supply a 1kHz signal through ATT (−24dB) from AF oscillator, to LINE IN.
5. Adjust ATT until monitor level at LINE OUT becomes 0.42V.
6. Playback recorded tape, and make sure that the output level at LINE OUT becomes 0.42V.
7. If measured value is not 0.42V±2dB, adjust it by using VR3 (L-CH) or VR4 (R-CH).
8. Repeat from step (2).

Standard value: 0.42V±2dB
[around 0.28V: at test points TP7 (L-CH) and TP8 (R-CH)]

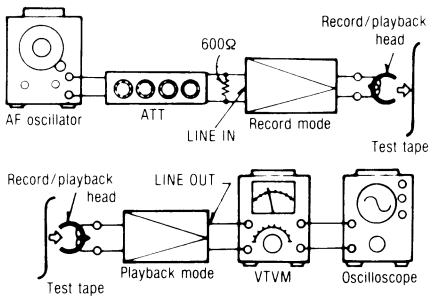

Fig. 18

Ⓘ Dolby NR circuit

Condition:
- Record mode
- Dolby NR switch...IN/OUT
- Dolby NR select switch...B/C
- Input level control...MAX
- Output level control...MAX
- Balance control...Center

Equipment:
- VTVM
- AF oscillator
- ATT
- Oscilloscope
- Resistor (600Ω)

Record side

• Check of the Dolby-B type encoder characteristics

1. Make connections as shown in fig. 19.
2. Set the unit to the record mode. (NR select switch is OUT.)
3. Apply a 1kHz signal to LINE IN.
4. Adjust the ATT so that the output level at TP7 (L-CH) and TP8 (R-CH) is 12.3mV.
5. The output level at pin 14 should also be 12.3mV. (Let 12.3mV = 0dB for this adjustment.)
6. Set the NR select switch to B, and make sure that the output signal level at pin 14 of IC3 (L-CH) and IC4 (R-CH) is +6dB±2.5dB.
7. Set the NR select switch to OUT, and adjust the frequency to 5kHz. The output signal level at pin 14 should be 0dB.
8. Set the NR select switch to B and make sure that the output signal level at pin 14 of IC3 (L-CH) and IC4 (R-CH) is +8dB±2.5dB.

• Check to Dolby-C type encoder characteristics

9. Repeat steps 1-5 above.
10. Set the NR select switch to C and make sure that the output signal level at pin 14 of IC3 (L-CH) and IC4 (R-CH) is +11.5dB±2.5dB.
11. Set the NR select switch to OUT and adjust the frequency to 5kHz. The output signal at pin 14 should be 0dB.
12. Set the NR select switch to C and make sure that the output signal level at pin 14 of IC3 (L-CH) and IC4 (R-CH) is +8.5dB±2.5dB.

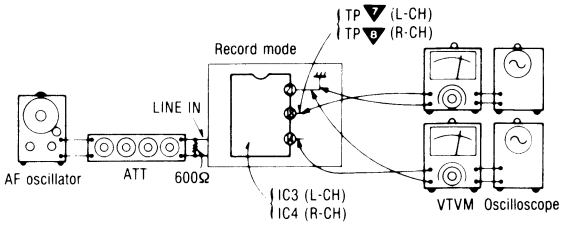

Fig. 19

J Attack recovery time adjustment (dbx circuit)

Condition:
- Record mode
- Input level control...MAX
- Noise reduction selector ...dbx tape

Equipment:
- VTVM
- ATT
- AF oscillator
- DC voltage

1. Make the connections as shown in fig. 20 and apply 1kHz −27dB signal from LINE IN, and set the noise reduction selector to dbx tape position.
2. Set the unit to record mode, adjust ATT so that the signal level at C107 (L-CH) and C108 (R-CH) is 300mV.
3. Read voltage on DC volt meter.

Reference value: 15±0.5mV

4. If measured value is not within reference, adjust VR11 (shown in fig. 1).

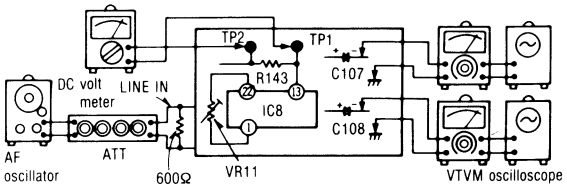

Fig. 20

K Input scanning time adjustment

Condition:
- Stop mode

Equipment:
- Oscilloscope

1. Place the recorder in the stop mode.
2. Connect an oscilloscope to pin 2 of IC401, as shown in fig. 21.
3. Make sure that the measured values are within the reference value.

Reference value: Approx. 4.6msec.

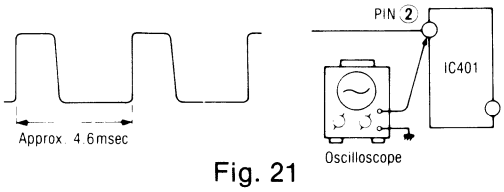

Fig. 21

L Fluorescent meter

Condition:
- Record mode
- Input level controls...MAX

Equipment:
- VTVM
- ATT
- AF oscillator

• Check for FL meter

To check the accuracy of the FL meter, measure the output level at test point [TP7 (L-CH), TP8 (R-CH)].

1. Make connections as shown (See fig. 22).
2. Connect a wire between TP501 and TP502 terminal (See fig. 23).
3. In the recording pause mode, apply 1kHz (−24dB) to LINE IN.
4. Adjust ATT so that output level at test point [TP7 (L-CH), TP8 (R-CH)] is 0.28V.

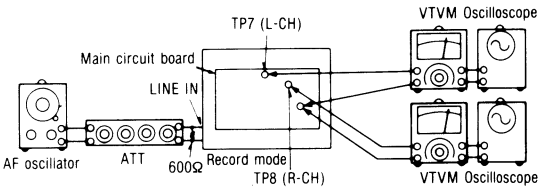

Fig. 22

Checking FL meter 0dB segment display ON/OFF

Change the output level at test point [TP7 (L-CH), TP8 (R-CH)] from 0.28V −1dB (≒250mV) to 0.28V +1dB (≒310mV) by adjusting the attenuator, and check that the FL meter 0dB segment display OFF state changes to the ON state.

Checking FL meter −40dB segment display ON/OFF

Lower the signal level 28dB below the standard input level (−24dB−28dB = −52dB≒2.5mV) and then further lower the level 12dB (−52dB−12dB = −64dB≒0.63mV) by adjusting the attenuator. While lowering the level as described above, make sure that only the −40dB display remains lit the dims or goes off at the lowest level.

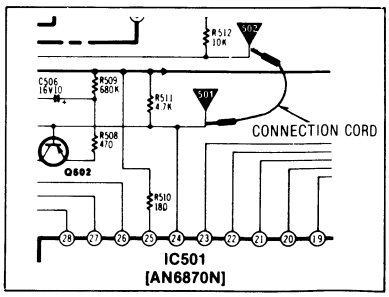

Fig. 23

• Adjustment for FL meter

1. Make connections as shown (See fig. 22).
2. Connect a wire between TP501 and TP502 terminal (See fig. 23).
3. In the recording pause mode, apply 1kHz (−24dB) to LINE IN.
4. Adjust ATT so that output level at test point [TP7 (L-CH), TP8 (R-CH)] is 0.28V.

−40dB adjustment

5. Adjust ATT so that the level adjusted at step 4 is reuced by 40dB.
6. At this time, check that −40dB indicator is dimmed (intermediate brightness between full brightness and light-out: See fig. 24).
7. If the indicator is not lighted halfway as described in step 6, adjust VR8.

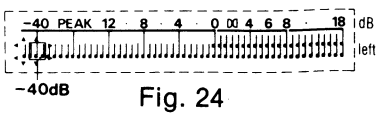

Fig. 24

0dB adjustment

8. Restore the condition of step 4 (set output level to 0.28V at test point [TP7 (L-CH), TP8 (R-CH)].
9. At this time, check that 0dB indicator is dimmed (intermediate brightness between full brightness and light-out (See fig. 25).
10. If improper, adjust VR501.
11. Repeat adjustments at steps 4, 5, 6, 7, 8, 9 and 10 two or three times.
12. Disconnect the wire between TP501 and TP502 terminal, which had been connected at step 2.

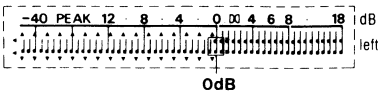

Fig. 25

Ⓜ **Photo sensor circuit** Condition:
• Playback mode

NOTE:

When adjusting the photo sensor circuit, leave the front panel, cassette lid and indication plate in place. (External light can cause the photo sensor in the cassette holder to malfunction and makes accurate adjustment impossible.)

Sensitivity adjustment

Some malfunctions, such as tape reverse or auto stop, may sometimes occur during tape travel according to type and make of tape. If the trouble is caused only by tape wrinkles, perform, the following adjustments.

1. While playing the section causing malfunction, adjust VR303 so that normal operation is obtained. (Shown in fig. 1).
2. Then play the leader tape section and check for normal operation (that tape reverse and auto stop are eliminated).

MICROCOMPUTER TERMINAL FUNCTION AND WAVEFORM (IC401: MN1564RME)

Terminal No.	Symbol	Name	Function/operation
1.	VSS	GND	
2.	Pφφ	FL grid & input switch scanning	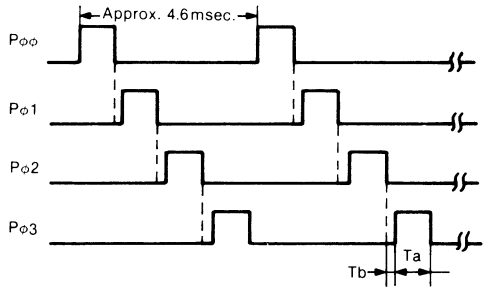 Pulse width: Ta = Approx. 1.0msec, Tb = Approx. 80μsec.
3.	Pφ1		
4.	Pφ2		
5.	Pφ3		
6.	ST0	————	• Non connection.
7.	P1φ	Reading of input switch state REW • STOP • ⟲ • TIME	• Reads switch inputs corresponding to scanning of Pφφ to Pφ3. 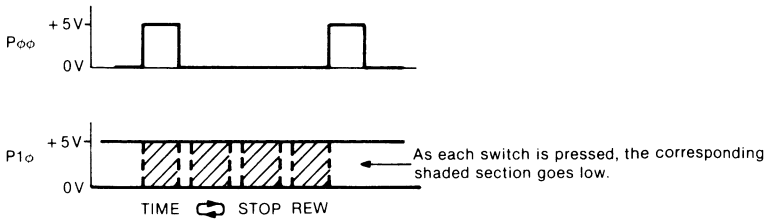

Terminal No.	Symbol	Name	Function/operation
8.	P11	Reading of input switch state FF • PAUSE • ⇄ • TAPE	• Reads switch inputs corresponding to scanning of Pφφ to Pφ3. 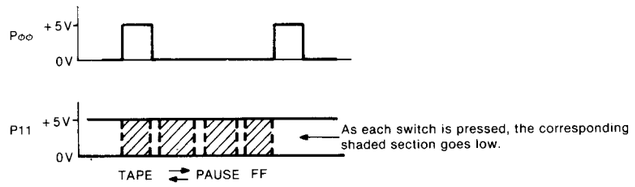
9.	P12	Reading of input switch state REC • PLAY • TIMER PLAY • COUNTER RESET	• Reads switch inputs corresponding to scanning of Pφφ to Pφ3. 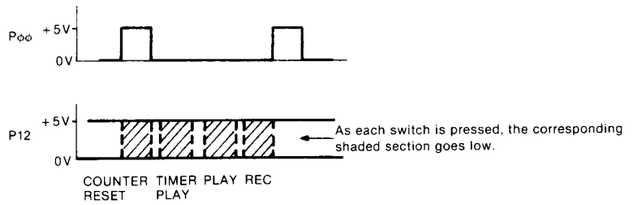
10.	P13	Reading of input switch state DIR • TIMER REC	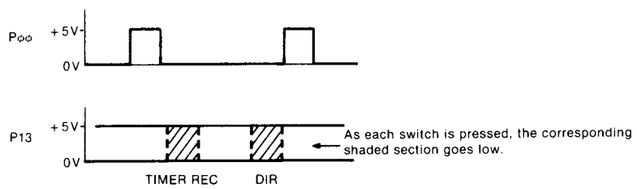
11.	ST1	———	Non connection. 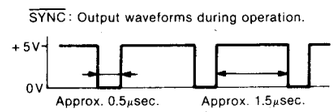
12.	$\overline{\text{SYNC}}$	———	
13.	$\overline{\text{SIRQ}}$	———	
14.	$\overline{\text{IRQ}}$	———	
15.	$\overline{\text{SBT}}$	———	
16.	$\overline{\text{SBD}}$	———	
17.	$\overline{\text{RST}}$	Reset terminal	• Terminal for reset signal to computer. • Automatically reset at not more than 3.5 to 4.0V. 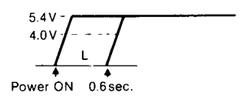
18.	P2φ	Reading of input switch state AUTO REC MUTE • 1 • 5 • 9	• Reads switch inputs corresponding to scanning of Pφφ to Pφ3. 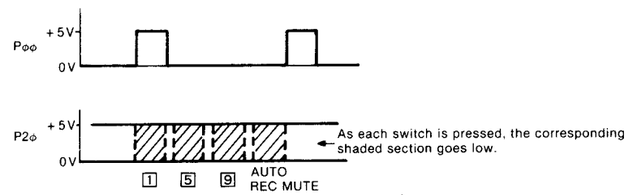

Terminal No.	Symbol	Name	Function/operation
19.	P21	Reading of input switch state DMS • 2 • 6 • 10	• Reads switch inputs corresponding to scanning of Pφφ to Pφ3. 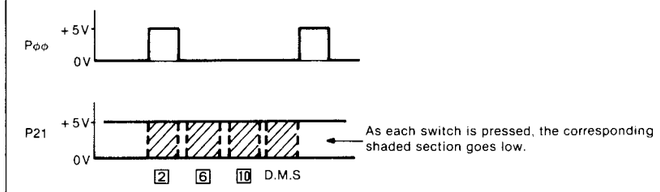
20.	P22	Reading of input switch state REPEAT • 3 • 7 • 11	• Reads switch inputs corresponding to scanning of Pφφ to Pφ3. 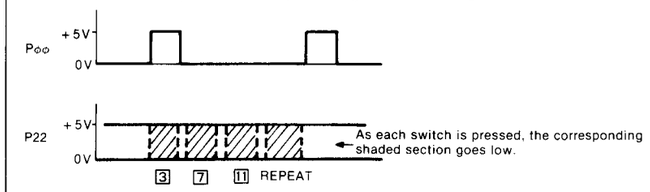
21.	P23	Reading of input switch state B.S • 4 • 8 • 12	• Reads switch inputs corresponding to scanning of Pφφ to Pφ3. 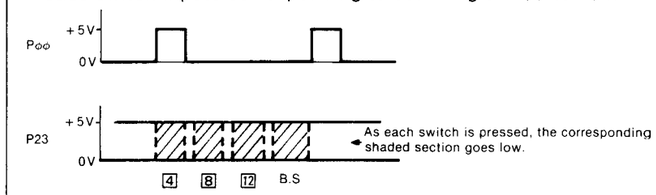
22.	P3φ	Dynamic lighting indication FWD • 1 • 5 • 9 LED	• Four corresponding LEDs light one at a time in accordance with the scanning of Pφφ to Pφ3. 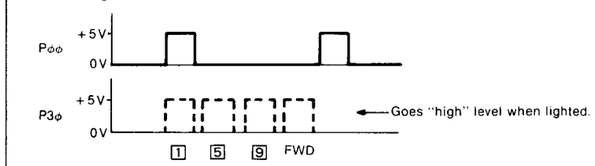
23.	P31	Dynamic lighting indication REV • 2 • 6 • 10 • LED	• Four corresponding LEDs light one at a time in accordance with the scanning of Pφφ to Pφ3. 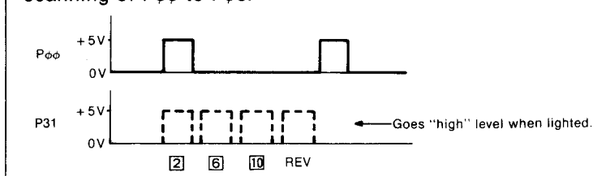
24.	P32	Dynamic lighting indication REPEAT • 3 • 7 • 11 • LED	• Four corresponding LEDs light one at a time in accordance with the scanning of Pφφ to Pφ3. 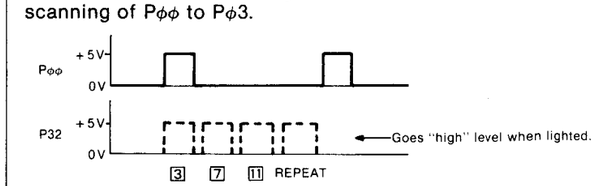

Terminal No.	Symbol	Name	Function/operation
25.	P33	Dynamic lighting indication B.S • 4 • 8 • 12	• Four corresponding LEDs light one at a time in accordance with the scanning of Pφφ to Pφ3. 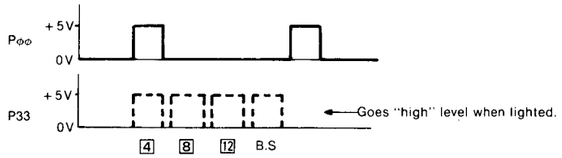
26.	Pφ4	FL counter Segment g	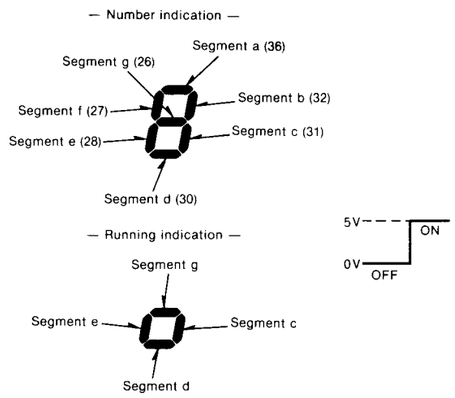 Counter number changes when takeup reel table rotates two turns. Each segment of running indication changes when the reel table rotates a half turn. Waveforms change since dynamic lighting is used. • "min", "sec", and ":" are displayed when the TIME signal is given. 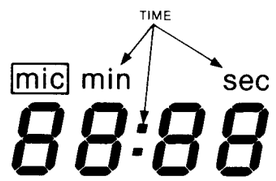
27.	P41	FL counter Segment f	
28.	P42	FL counter Segment e	
29.	P43	TIME	
30.	Pφ5	FL counter Segment d	
31.	P51	FL counter Segment c	
32.	P52	FL counter Segment b	
36.	P53	FL counter Segment a	
33.	VDD	Power supply terminal	• Operative on 4.5 to 5.5 volts (typically 5.4 volts).
34.	VMM	Power supply terminal for the memory	• Operative on 4.5 to 5.5 volts (typically 5.4 volts).
35.	$\overline{\text{HLDM}}$	Power hold instruction terminal for the memory	• Operative on 4.5 to 5.5 volts (typically 5.4 volts).
37.	Pφ6	Reading of input switch state FWD REC INH	• "High" level when a tape not prepared with miserase prevention masking is loaded. • "Low" level with the cassette lid open.
38.	P61	Reading of input switch state REV REC INH	• "High" level when a tape not prepared with miserase prevention masking is loaded. • "Low" level with the cassette lid open.

Terminal No.	Symbol	Name	Function/operation
39.	P62	Reading of input switch state CAM A (S607)	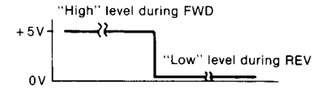
40.	P63	Reading of input switch state CAM B (S606)	• Input in switching-over from FWD PLAY to REV PLAY. 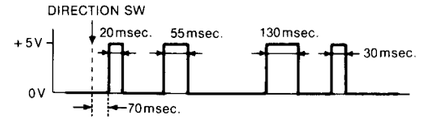
41.	Pφ7	Reading of input switch state Half det. (S603)	• Goes "low" level when a cassette tape is loaded and the cassette lid is closed. • "High" level with the cassette lid open.
42.	P71	Leader tape det	• "Low" level pulses are generated between the leader tape section and the magnetic section. 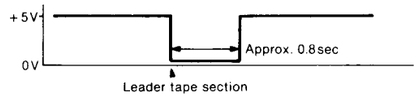
43.	P72	Detection of music intervals	• Goes low during a portion between music pieces (no signal portion).
44.	P73	————	• Non connection.
45.	P80	Muting for all amplifiers	• "High" level during FF, REW and STOP. • "Low" level during REC, PLAY and CUE/REV.
46.	P81	CUE/REVIEW MUTE	• "High" level pulse with CUE/REVIEW button pressed during PLAY. 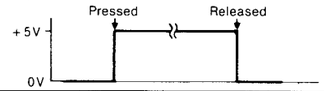
47.	P82	Drive motor CCW rotation command	• "High" level pulse in each mode in operational sequence REV PLAY → PAUSE → STOP → FOW PLAY. • During switching between REV PLAY → FOW PLAY. 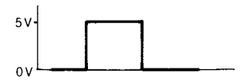
48.	P83	Drive motor CW rotation command	• "High" level pulse in each mode in operational sequence FOW PLAY → PAUSE → STOP → REV PLAY. • During switching between FWD PLAY → REV PLAY. 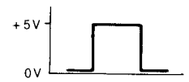
49.	Pφ9	REC indication output	• "High" level concurrently with REC command. • In TIMER REC mode, "High" level just after power on. 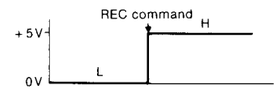
50.	P91	PAUSE indication output	• "High" level concurrently with PAUSE command. 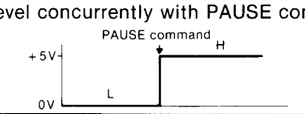

Terminal No.	Symbol	Name	Function/operation
51.	P92	Reel takeup torque selection and PLAY indication output	• "High" level during PLAY. • "Low" level during FF, REW and STOP.
52.	P93	DIRECTION indication output	• "Low" level during FORWARD. • "High" level during REVERSE.
53.	PAϕ	Bias oscillation ON/OFF	• Goes to "Low" immediately after REC/PAUSE operation. • Remains in "Low" during REC/PLAY operation. • Goes to "Low" approximately 20msec after the STOP command is given. REC command, STOP command, +5V, 0V, REC • PAUSE mode, Approx. 20msec.
54.	PA1	REC MUTE	• "High" level pulse with REC MUTE button pressed during REC PLAY. Pressed, +5V, 0V, Approx. 4sec.
55.	PA2	FF/REW motor rotation select (FF/REW motor CCW rotation command)	• "High" level during: FWD PLAY, FWD F.F, REV REW
56.	PA4	FF/REW motor rotation select (FF/REW motor CW rotation command)	• "High" level during: REV PLAY, REV F.F, FWD REW
57.	PBϕ	Reel table rotation detection-1 (tape counter)	• Rotation pulses are generated according to the rotation speed of the take-up reel table in the FWD mode. • Two pulses are generated per reel table rotation. Reel table rotation detection-1 (tape counter), +5V, 0V Reel table rotation detection-2 (tape counter), +5V, 0V Phase difference: approximately 90 degrees — Counterclockwise rotation of the reel table Phase difference: approximately 90 degrees — Clockwise rotation of the reel table
58.	PB1	Reel table rotation detection-2 (tape counter)	
59.	PB2	Output mute during power on	• Goes "high" level when power is on. • This terminal goes "low" level when terminal 17 goes "high" level. Power ON, No. 17 Terminal "L", +5V, H, L, 0V
60.	PB3	Input switch reading Head rotation direction detection (S608)	• "High" level during FORWARD.

Terminal No.	Symbol	Name	Function/operation
61.	OSC2	Terminals for connecting the oscillator device of a clock	• Generates oscillation at approximately 4MHz. 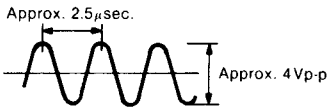
62.	OSC1	Terminals for connecting the oscillator device of a clock	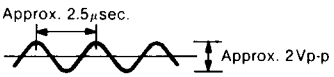
63.	$\overline{TC1}$	————	• Non connection.
64.	$\overline{TC\phi}$	————	• Non connection. Output waveforms during operation 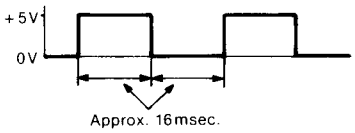

NOTES (for Block diagram)

- S1-1, S1-2.....
  Dolby-C IN/OUT switch (shown in OUT position).
- S2-1, S2-2.....
  Dolby-B IN/OUT switch (shown in OUT position).
- S3-1, S3-2.....
  dbx "Tape" IN/OUT switch (shown in OUT position).
- S4-1, S4-2.....
  dbx "Disc" IN/OUT switch (shown in OUT position).
- S301.....
  Power ON/OFF switch (shown in OFF position).
- S302.....
  AC power voltage select switch.
- S401.....
  Timer REC/PLAY switch (shown in Timer REC position).
- S402-1, S402-2.....
  Mode select switch (⟲ / ⇄).
- S501.....
  Direction switch (shown in OFF position).
- S502.....
  Record switch (shown in OFF position).
- S503.....
  F.F switch (shown in OFF position).
- S504.....
  Rewind switch (shown in OFF position).
- S505.....
  Play switch (shown in OFF position).
- S506.....
  Pause switch (shown in OFF position).
- S507.....
  Stop switch (shown in OFF position).
- S508.....
  Auto-Rec mute switch (shown in OFF position).
- S509.....
  Counter Reset switch (shown in OFF position).
- S510.....
  Tape counter switch (shown in OFF position).
- S511.....
  Time counter switch (shown in OFF position).
- S512.....
  D.M.S. [1] switch (shown in OFF position).
- S513.....
  D.M.S. [2] switch (shown in OFF position).
- S514.....
  D.M.S. [3] switch (shown in OFF position).
- S515.....
  D.M.S. [4] switch (shown in OFF position).
- S516.....
  D.M.S. [5] switch (shown in OFF position).
- S517.....
  D.M.S. [6] switch (shown in OFF position).
- S518.....
  D.M.S. [7] switch (shown in OFF position).
- S519.....
  D.M.S. [8] switch (shown in OFF position).
- S520.....
  D.M.S. [9] switch (shown in OFF position).
- S521.....
  D.M.S. [10] switch (shown in OFF position).
- S522.....
  D.M.S. [12] switch (shown in OFF position).
- S523.....
  D.M.S. [13] switch (shown in OFF position).
- S524.....
  Blank Skip switch (shown in OFF position).
- S525.....
  Repeat switch (shown in OFF position).
- S526.....
  D.M.S. FWD/REV switch.
- S601.....
  Auto tape select switch (for Metal tape).
- S602.....
  Auto tape select switch (for CrO_2 tape).
- S603.....
  Cassette half switch (shown in OFF position).
- S604.....
  FWD Rec inhibit switch (shown in OFF position).
- S605.....
  REV Rec inhibit switch (shown in OFF position).
- S606.....
  FWD/REV changing switch (shown in OFF position).
- S607.....
  Mode changing switch (shown in OFF position).
- S608.....
  FWD/REV detection switch (shown in FWD position).

BLOCK DIAGRAM

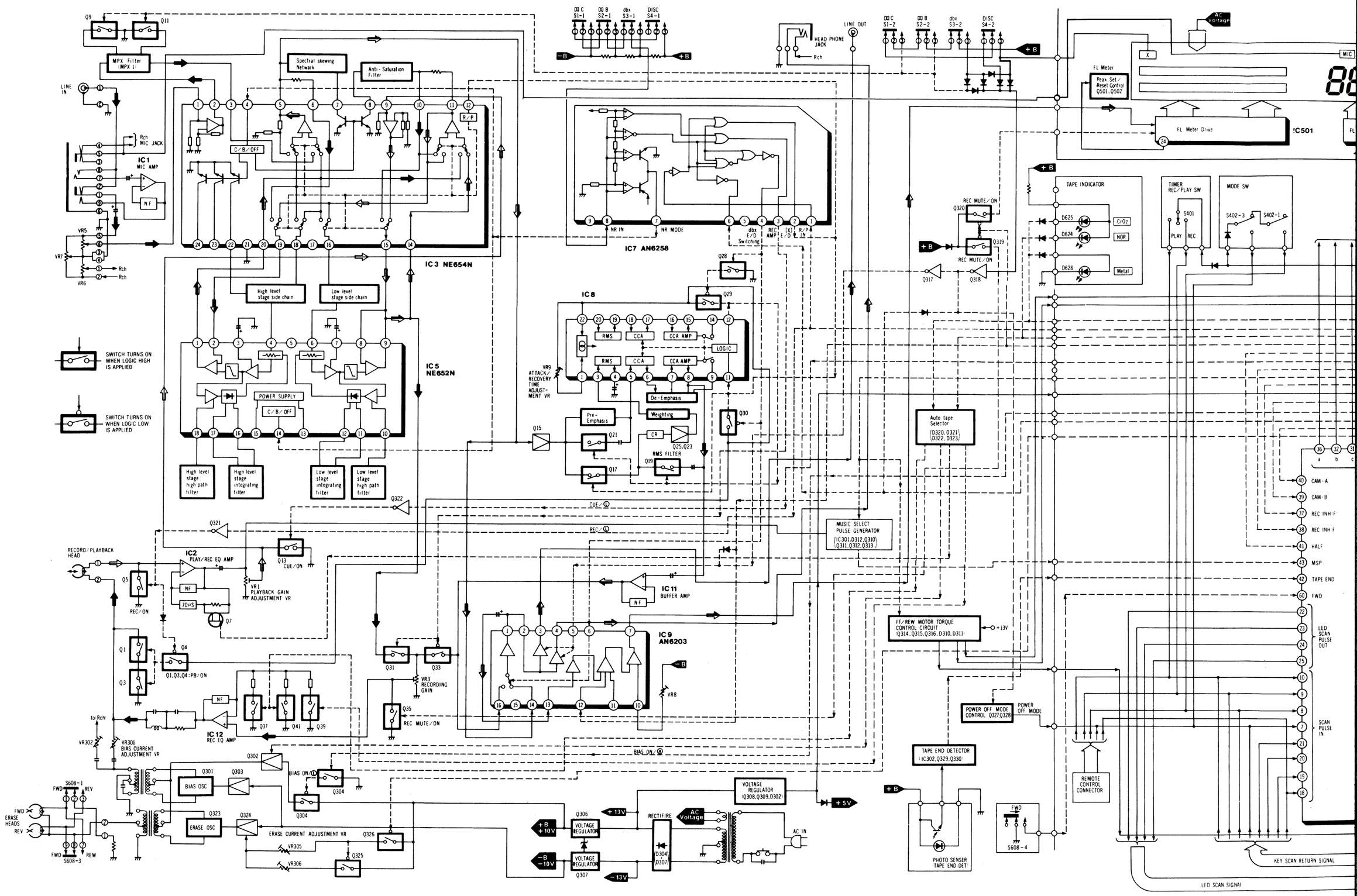

RS-B78R

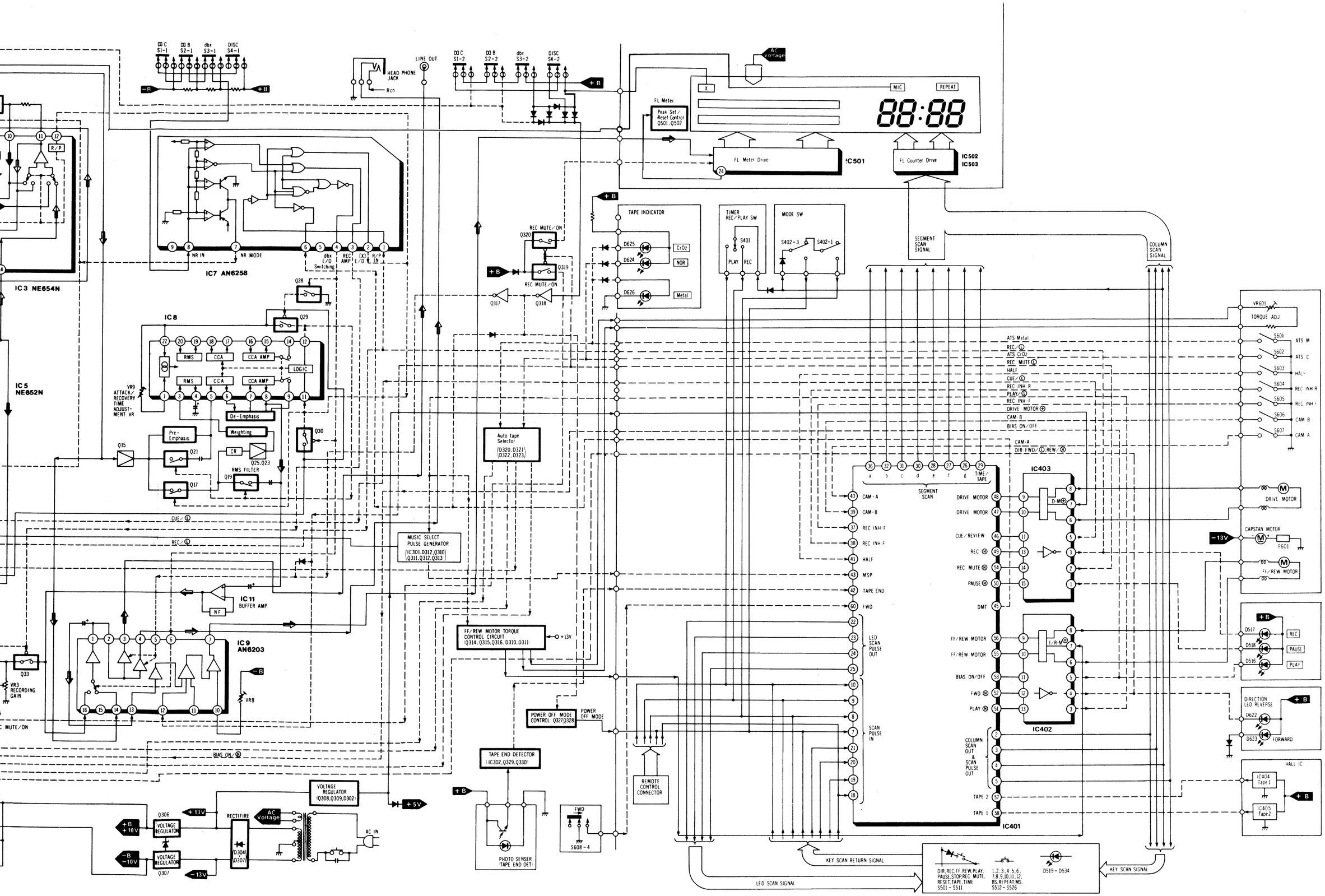
IC3 NE654N
IC5 NE652N
IC7 AN6258
IC8
IC9 AN6203
IC11 BUFFER AMP
IC401
IC402
IC403
IC501
IC502 IC503
FL Meter Drive
FL Counter Drive
Peak Set/ Reset Control (Q501,Q502)
TAPE INDICATOR
TIMER REC/PLAY SW
MODE SW
SEGMENT SCAN SIGNAL
COLUMN SCAN SIGNAL
TORQUE ADJ
DRIVE MOTOR
CAPSTAN MOTOR
FF/REW MOTOR
Auto tape Selector (D320,D321) (D322,D323)
MUSIC SELECT PULSE GENERATOR (IC301,D312,Q310) (Q311,Q312,Q313)
FF/REW MOTOR TORQUE CONTROL CIRCUIT (Q314,Q315,Q316,D310,D311)
POWER OFF MODE CONTROL Q327,Q328
TAPE END DETECTOR (IC302,Q329,Q330)
PHOTO SENSER TAPE END DET
REMOTE CONTROL CONNECTOR
VOLTAGE REGULATOR (Q308,Q309,D302)
RECTIFIRE
AC IN
KEY SCAN RETURN SIGNAL
KEY SCAN SIGNAL
LED SCAN SIGNAL
HALL IC

SCHEMATIC DIAGRAM (for Main/FL Meter Section)

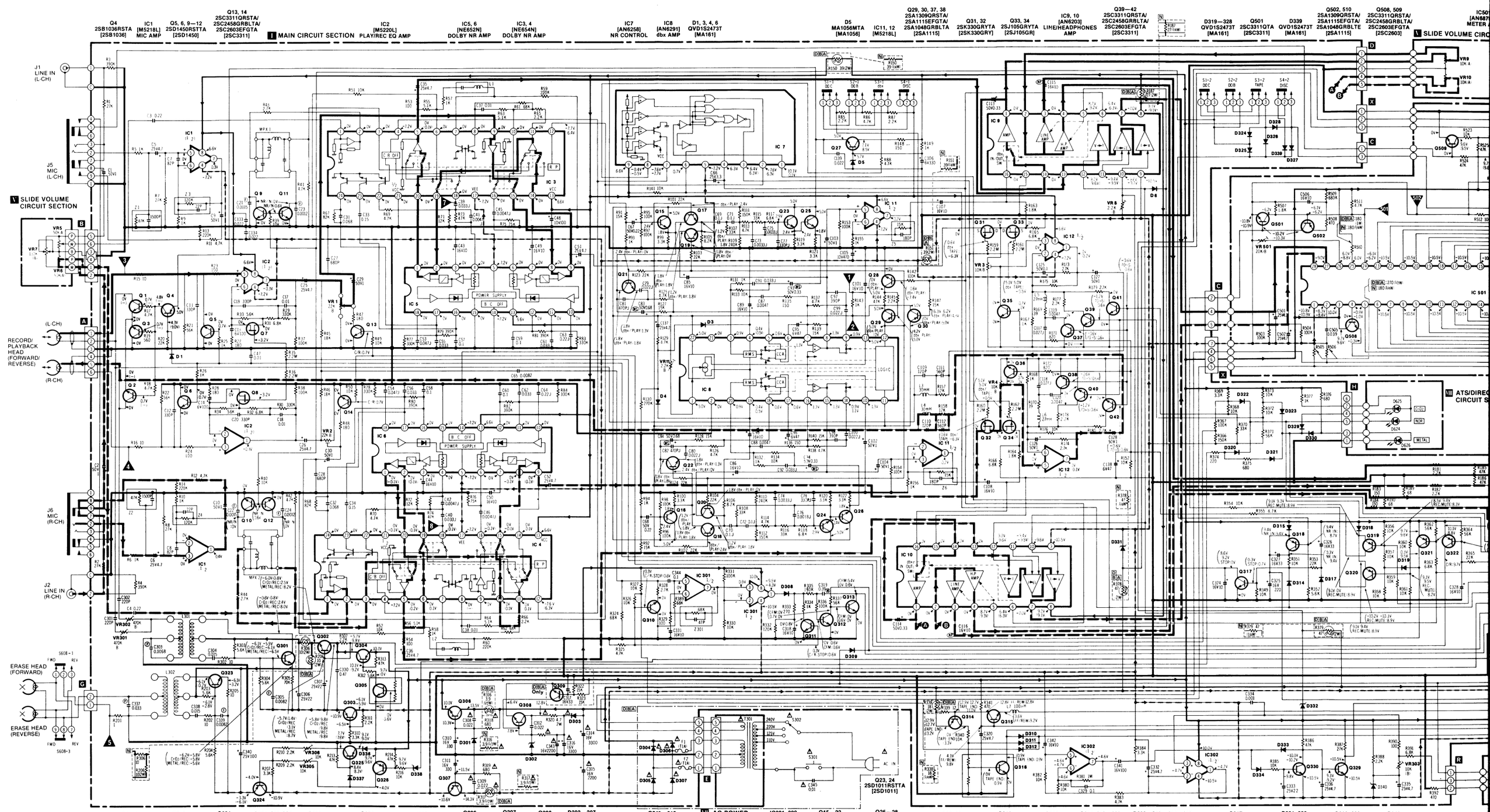

NOTES:

- D .....For all European areas except United Kingdom.
- B .....For United Kingdom.
- N .....For Asia, Latin America, Middle East and Africa areas.
- A .....For Australia.

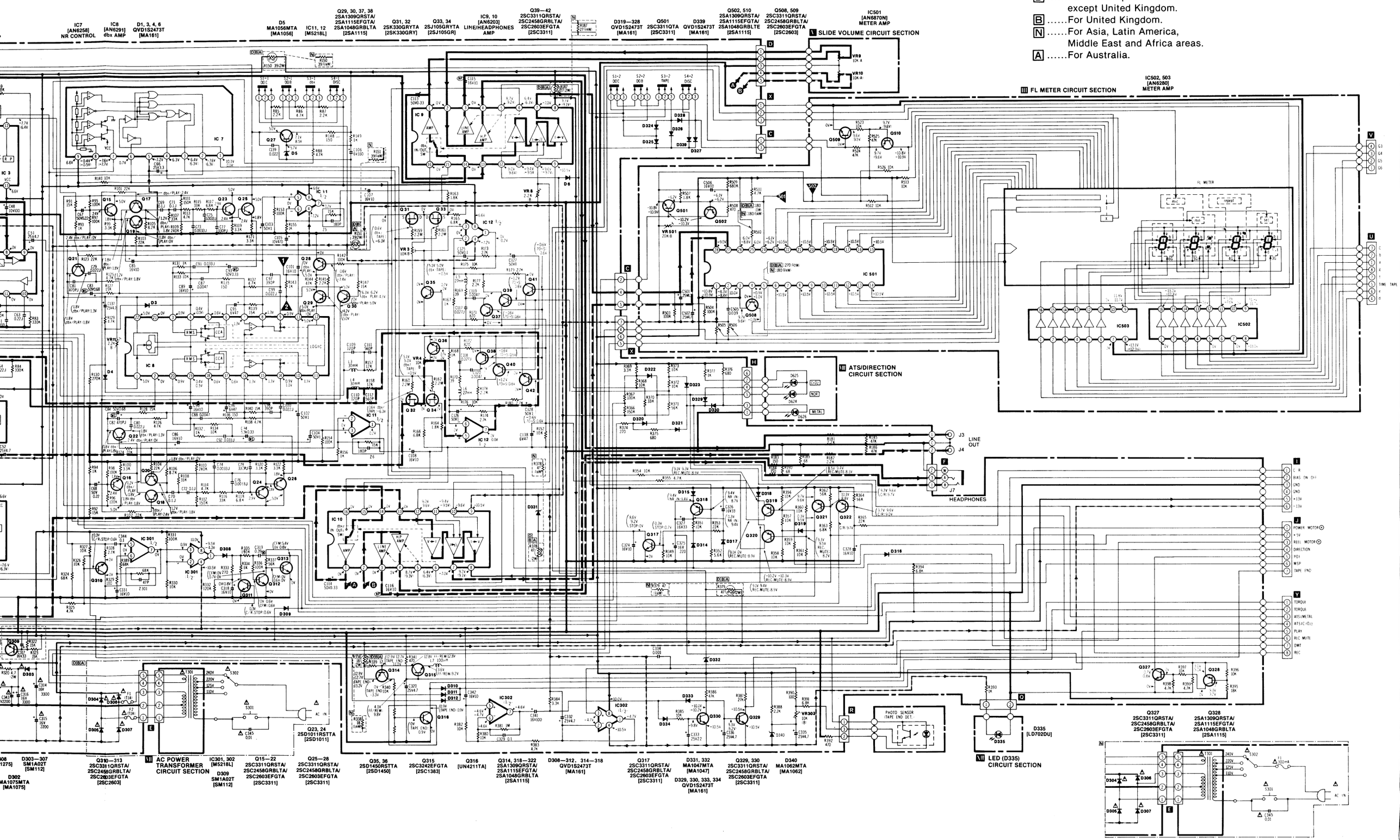

SCHEMATIC DIAGRAM (for Main/FL Meter Section)

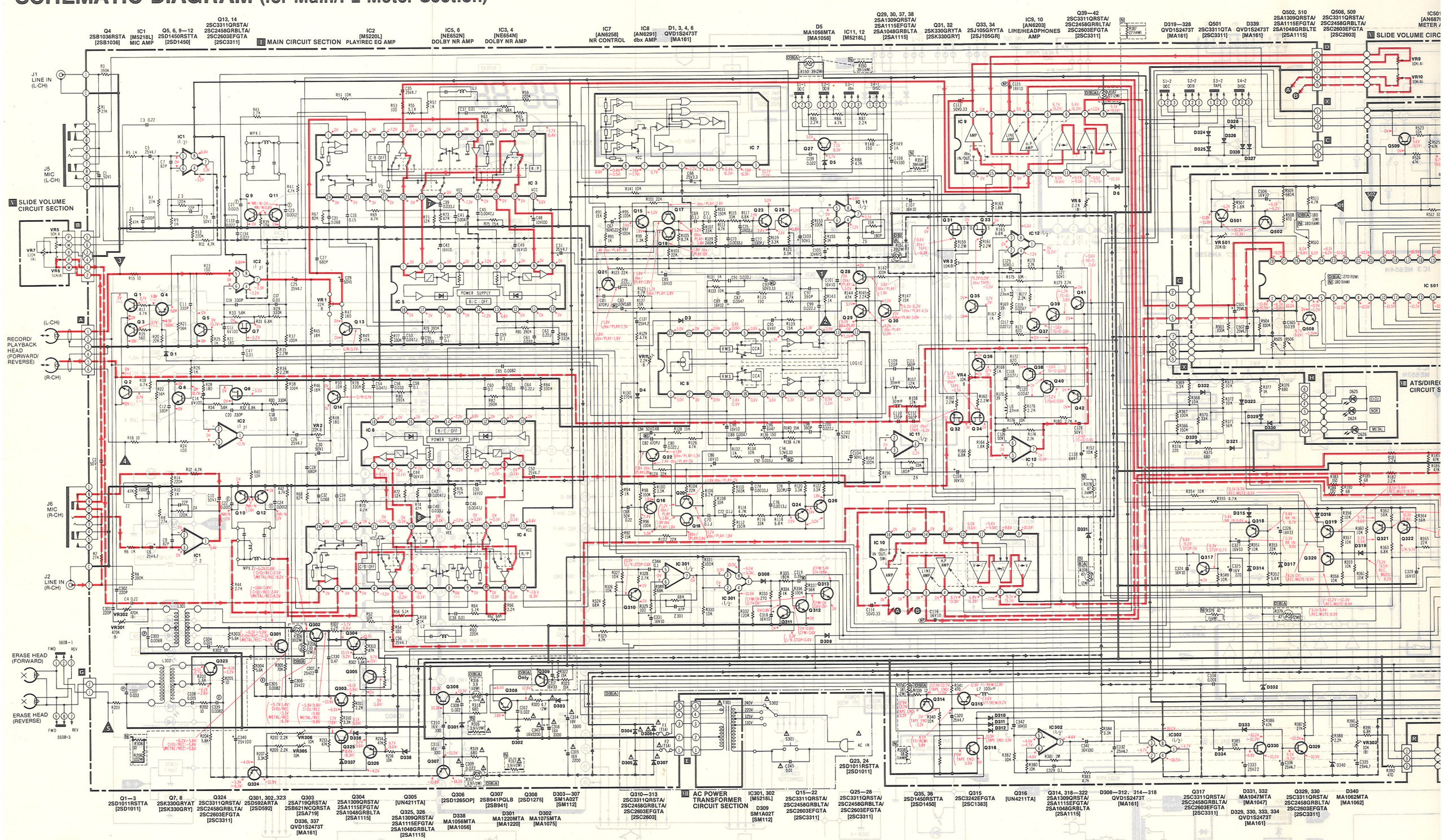

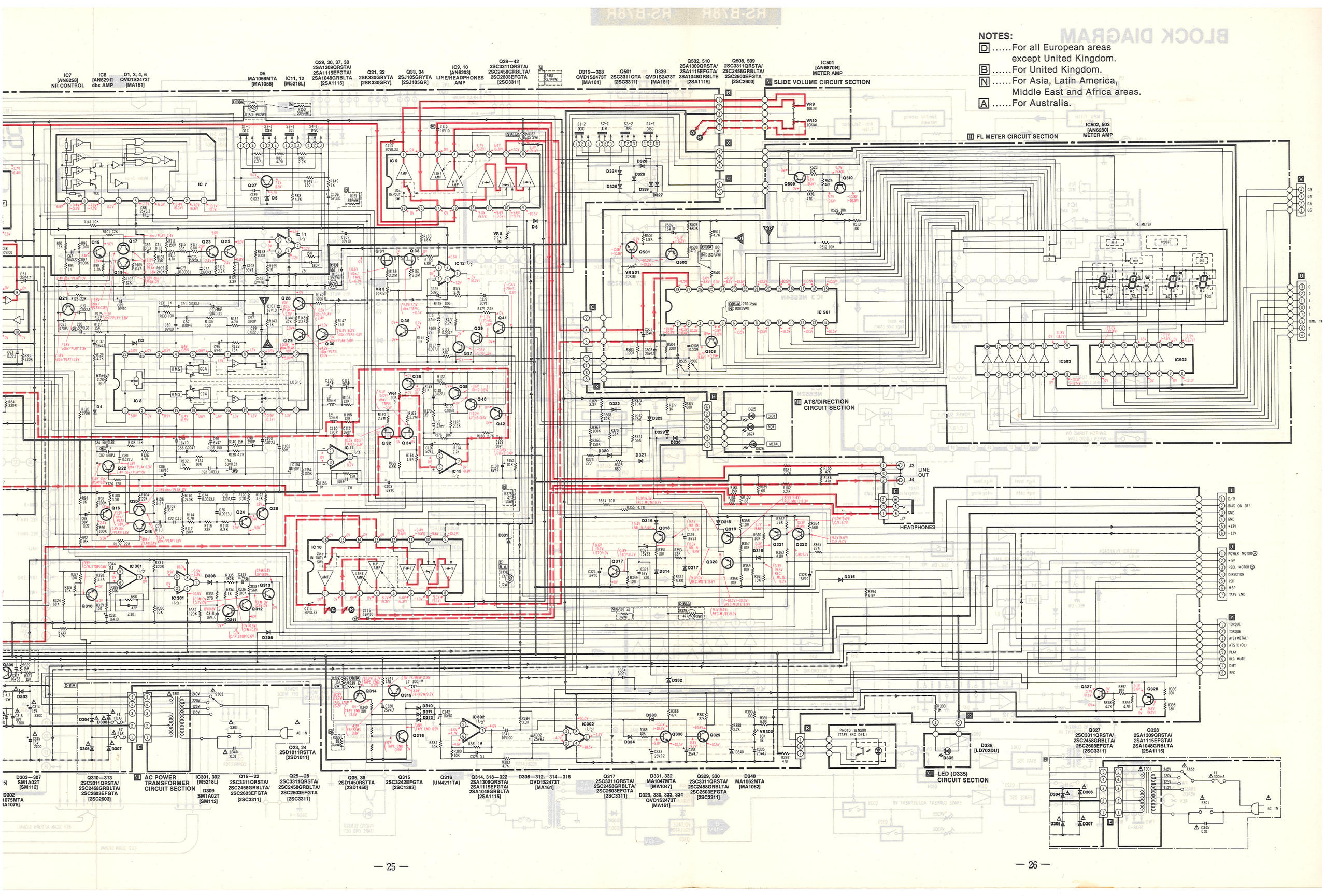
NOTES:
D .....For all European areas except United Kingdom.
B .....For United Kingdom.
N .....For Asia, Latin America, Middle East and Africa areas.
A .....For Australia.
IC7 [AN6258] NR CONTROL
IC8 [AN6291] dbx AMP
D1, 3, 4, 6 QVD1S2473T [MA161]
D5 MA1056MTA [MA1056]
IC11, 12 [M5218L]
Q29, 30, 37, 38 2SA1309QRSTA/ 2SA1115EFGTA/ 2SA1048GRBLTA [2SA1115]
Q31, 32 2SK330GRYTA [2SK330GRY]
Q33, 34 2SJ105GRYTA [2SJ105GR]
IC9, 10 [AN6203] LINE/HEADPHONES AMP
Q39—42 2SC3311QRSTA/ 2SC2458GRBLTA/ 2SC2603EFGTA [2SC3311]
D319—328 QVD1S2473T [MA161]
Q501 2SC3311QTA [2SC3311]
D339 QVD1S2473T [MA161]
Q502, 510 2SA1309QRSTA/ 2SA1115EFGTA/ 2SA1048GRBLTE [2SA1115]
Q508, 509 2SC3311QRSTA/ 2SC2458GRBLTA/ 2SC2603EFGTA [2SC2603]
IC501 [AN6870N] METER AMP
V SLIDE VOLUME CIRCUIT SECTION
III FL METER CIRCUIT SECTION
IC502, 503 [AN6280] METER AMP
VII ATS/DIRECTION CIRCUIT SECTION
LINE OUT
HEADPHONES
VIII LED (D335) CIRCUIT SECTION
D335 [LD702DU]
PHOTO SENSOR (TAPE END DET.)
D303—307 SM1A02T [SM112]
Q310—313 2SC3311QRSTA/ 2SC2458GRBLTA/ 2SC2603EFGTA [2SC2603]
VI AC POWER TRANSFORMER CIRCUIT SECTION
IC301, 302 [M5218L]
D309 SM1A02T [SM112]
Q15—22 2SC3311QRSTA/ 2SC2458GRBLTA/ 2SC2603EFGTA [2SC3311]
Q25—28 2SC3311QRSTA/ 2SC2458GRBLTA/ 2SC2603EFGTA [2SC3311]
Q23, 24 2SD1011RSTTA [2SD1011]
Q35, 36 2SD1450RSTTA [2SD1450]
Q315 2SC3242EFGTA [2SC1383]
Q316 [UN4211TA]
Q314, 318—322 2SA1309QRSTA/ 2SA1115EFGTA/ 2SA1048GRBLTA [2SA1115]
D308—312, 314—318 QVD1S2473T [MA161]
Q317 2SC3311QRSTA/ 2SC2458GRBLTA/ 2SC2603EFGTA [2SC3311]
D331, 332 MA1047MTA [MA1047]
D329, 330, 333, 334 QVD1S2473T [MA161]
Q329, 330 2SC3311QRSTA/ 2SC2458GRBLTA/ 2SC2603EFGTA [2SC3311]
D340 MA1062MTA [MA1062]
Q327 2SC3311QRSTA/ 2SC2458GRBLTA/ 2SC2603EFGTA [2SC3311]
Q328 2SA1309QRSTA/ 2SA1115EFGTA/ 2SA1048GRBLTA [2SA1115]
AC IN

NOTES:

- S1-1, S1-2 ..... Dolby-C IN/OUT switch (shown in OUT position).
- S2-1, S2-2 ..... Dolby-B IN/OUT switch (shown in OUT position).
- S3-1, S3-2 ..... dbx "Tape" IN/OUT switch (shown in OUT position).
- S4-1, S4-2 ..... dbx "Disc" IN/OUT switch (shown in OUT position).
- S301 ..... Power ON/OFF switch (shown in OFF position).
- S302 ..... AC power voltage select switch.
- S401 ..... Timer REC/PLAY switch (shown in Timer REC position).
- S402-1, S402-3 ... Mode select switch (/).
- S501 ..... Direction switch (shown in OFF position).
- S502 ..... Record switch (shown in OFF position)
- S503 ..... F.F switch (shown in OFF position).
- S504 ..... Rewind switch (shown in OFF position).
- S505 ..... Play switch (shown in OFF position).
- S506 ..... Pause switch (shown in OFF position).
- S507 ..... Stop switch (shown in OFF position).
- S508 ..... Auto-Rec mute switch (shown in OFF position).
- S509 ..... Counter Reset switch (shown in OFF position).
- S510 ..... Tape counter switch (shown in OFF position).
- S511 ..... Time counter switch (shown in OFF position).
- S512 ..... D.M.S. 1 switch (shown in OFF position).
- S513 ..... D.M.S. 2 switch (shown in OFF position).
- S514 ..... D.M.S. 3 switch (shown in OFF position).
- S515 ..... D.M.S. 4 switch (shown in OFF position).
- S516 ..... D.M.S. 5 switch (shown in OFF position).
- S517 ..... D.M.S. 6 switch (shown in OFF position).
- S518 ..... D.M.S. 7 switch (shown in OFF position).
- S519 ..... D.M.S. 8 switch (shown in OFF position).
- S520 ..... D.M.S. 9 switch (shown in OFF position).
- S521 ..... D.M.S. 10 switch (shown in OFF position).
- S522 ..... D.M.S. 11 switch (shown in OFF position).
- S523 ..... D.M.S. 12 switch (shown in OFF position).
- S524 ..... Blank Skip switch (shown in OFF position).
- S525 ..... Repeat switch (shown in OFF position).
- S526 ..... D.M.S. FWD/REV switch.
- S601 ..... Auto tape select switch (for Metal tape).
- S602 ..... Auto tape select switch (for CrO_2 tape).
- S603 ..... Cassette half switch (shown in OFF position).
- S604 ..... FWD Rec inhibit switch (shown in OFF position).
- S605 ..... REV Rec inhibit switch (shown in OFF position).
- S606 ..... FWD/REV changing switch (shown in OFF position).
- S607 ..... Mode changing switch (shown in OFF position).
- S608 ..... FWD/REV detection switch (shown in FWD position).
- VR1, 2 ..... Playback gain adjustment VR.
- VR3, 4 ..... Overall gain adjustment VR.
- VR5, 6 ..... Input level controls.
- VR7 ..... Balance control.
- VR8 ..... FL meter adjustment VR (-40dB indication).
- VR9, 10 ..... Output level controls.
- VR11 ..... Attack recovery time adjustment VR.
- VR301, 302 ..... Bias current adjustment VR.
- VR303 ..... Photo sensor sensitivity adjustment VR.
- VR305, 306 ..... Erase current adjustment VR.
- VR501 ..... FL meter adjustment VR (0dB indication).
- VR601 ..... Takeup torque adjustment VR.
- L1, L2 ..... Skewing Network.
- L3, L4 ..... Bias Trap Coil.
- L5, L6 ..... Peaking Coil.
- L7 ..... Check Coil.
- L301, L302 ..... Bias Oscillation Coil.
- L401 ..... Choke Coil.
- L601—L604 ..... Choke Coil.
- MPX1, 2 ..... Multiplex Filter.
- Resistance are in ohms (Ω), 1/4 watt unless specified otherwise. 1K = 1,000(Ω), 1M = 1,000k(Ω)
- Capacity are in micro-farads (μF) unless specified otherwise.
- The mark (▼) shows test point. e.g.▼ = Test point 1.
- All voltage values shown in circuitry are under no signal condition and playback mode with volume control at minimum position otherwise specified.

( ) ..... Voltage values at record mode.
dbx/PLAY ..... Voltage values at dbx encode mode.
dbx/TAPE ..... Voltage values at dbx encode or decode mode.
CrO_2 ..... Voltage values at CrO_2 tape mode.
Metal ..... Voltage values at Metal tape mode.
Stop ..... Voltage values at Stop mode.
C/R ..... Voltage values at CUE/REV mode.
FF/REW ..... Voltage values at FF/REW mode.
REC MUTE ..... Voltage values at AUTO REC MUTE mode.
70μs ..... Voltage values at CrO_2 or Metal tape mode.
NR IN ..... Voltage value at which the noise reduction switch is turned on.
CFM ..... Voltage value at which the test tape QZZCFM (315Hz/0dB) is played.
TAPE END ..... Voltage at the end of the cassette tape.
For measurement use VTVM.

- ( ) indicates B + (bias).
- ( ) indicates B - (bias).
- ( ) indicates the flow of the playback signal. (NR out).
- ( ) indicates the flow of the recording signal. (NR out).

- Important safety notice
  Components identified by ⚠ mark have special characteristics important for safety. When replacing any of these components, use only manufacturer's specified parts.
- Described in the schematic diagram are two types of numbers; the supply parts numbers and production parts number for transistors and diodes. One type of number is used for supply parts number and production parts number when they are identical.

  e.g. Q1
  2SC1844(E,F) —— Production parts number
  [2SC1844E] —— Supply parts number
  D212
  1S2473T77 —— Production parts number
  [MA161] —— Supply parts numbers
- **The supply parts number is described alone in the replacement parts list.**

- **This schematic diagram may be modified at any time with the development of new technology.**

SPECIFICATIONS

* Output level control...MAX
* Input level control ...MAX
* Balance control .....Center

Playback S/N ratio * Test tape...QZZCFM	Greater than 45dB
Overall distortion * Test tape ...QZZCRA for Normal ...QZZCRX for CrO_2 ...QZZCRZ for Metal	Less than 4%
Overall S/N ratio *Test tape...QZZCRA	Greater than 43dB (without NAB filter)

EQUIVALENT CIRCUIT

IC501: AN6870N

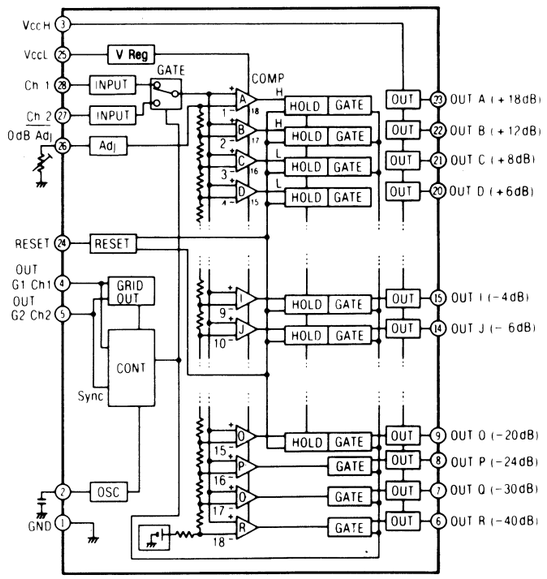

SCHEMATIC DIAGRAM (for Mechanism/Mechanism Control Section)

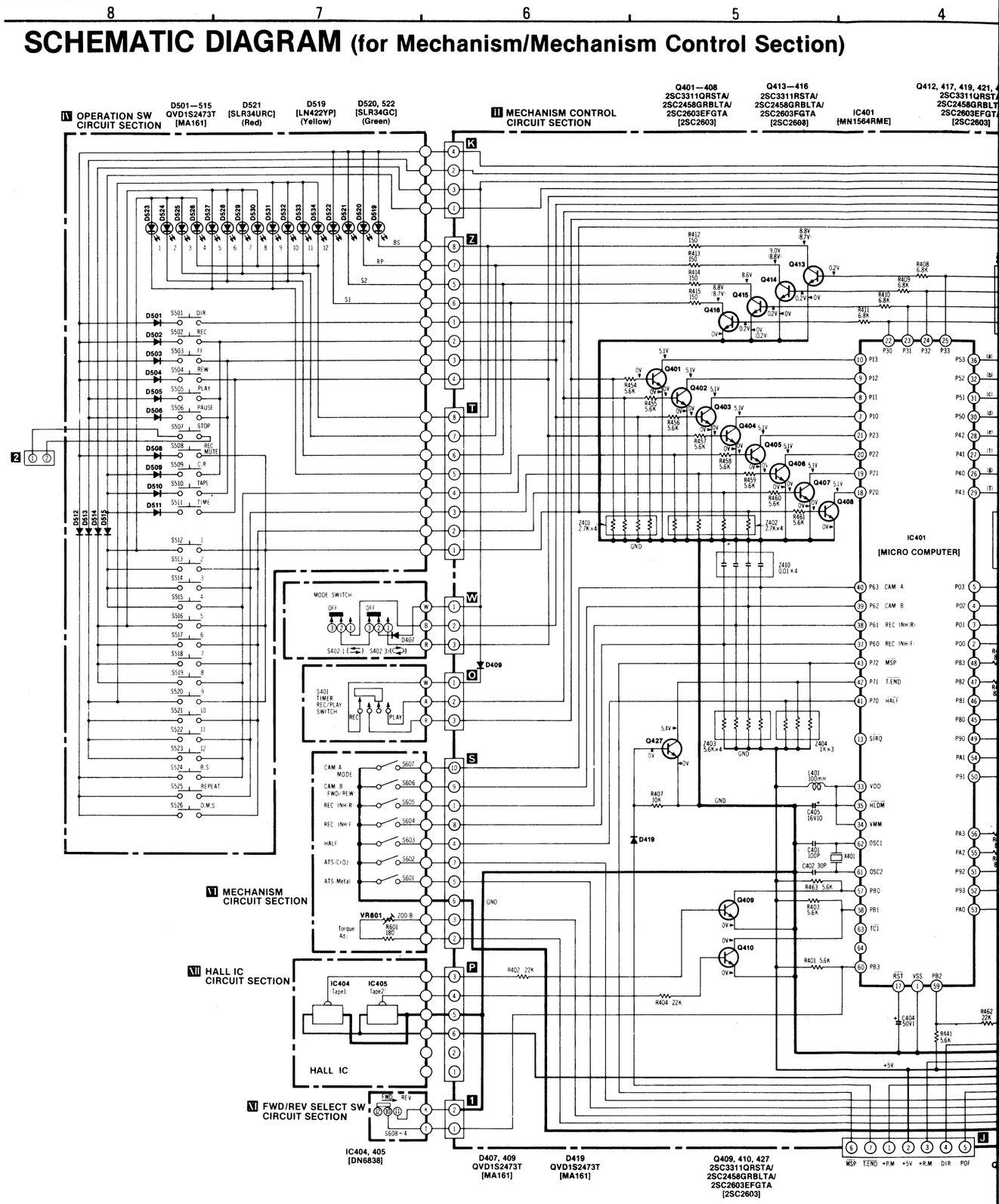

characteristics important
ponents, use only

pes of numbers; the supply
r transistors and diodes.
umber and production parts

number
nber

number
nbers
the replacement parts list.

odified at any time
ology.

l control...MAX
control ...MAX
ntrol .....Center

eater than 45dB
ess than 4%
ater than 43dB hout NAB filter)

UIT

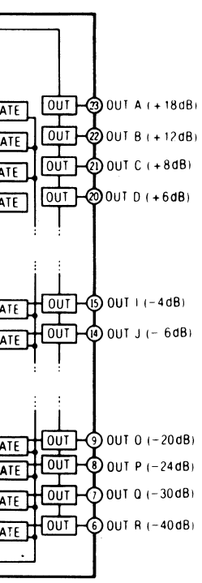

SCHEMATIC DIAGRAM (for Mechanism/Mechanism Control Section)

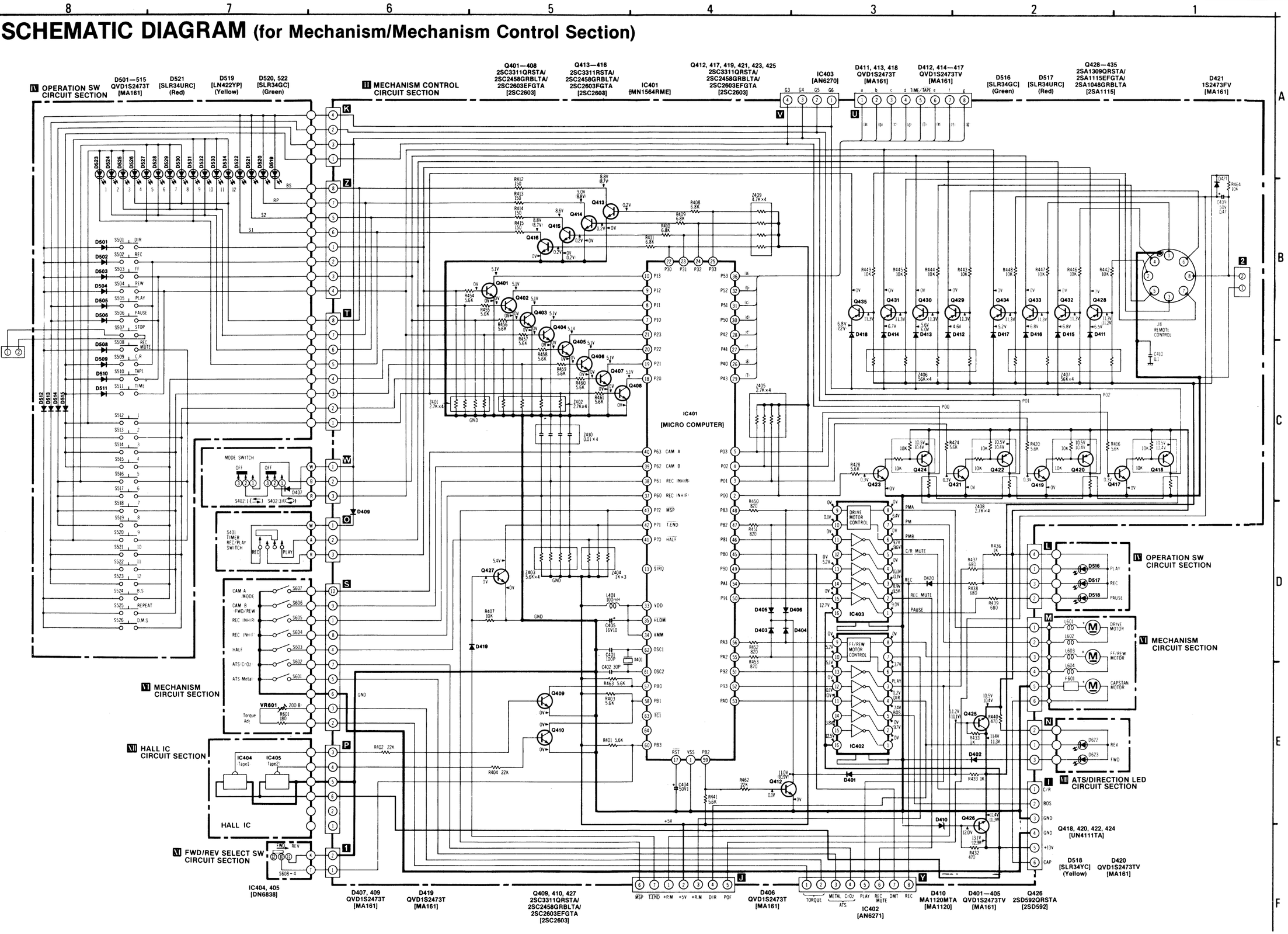

RS-B78R

SCHEMATIC DIAGRAM (for Mechanism/Mechanism Control Section)

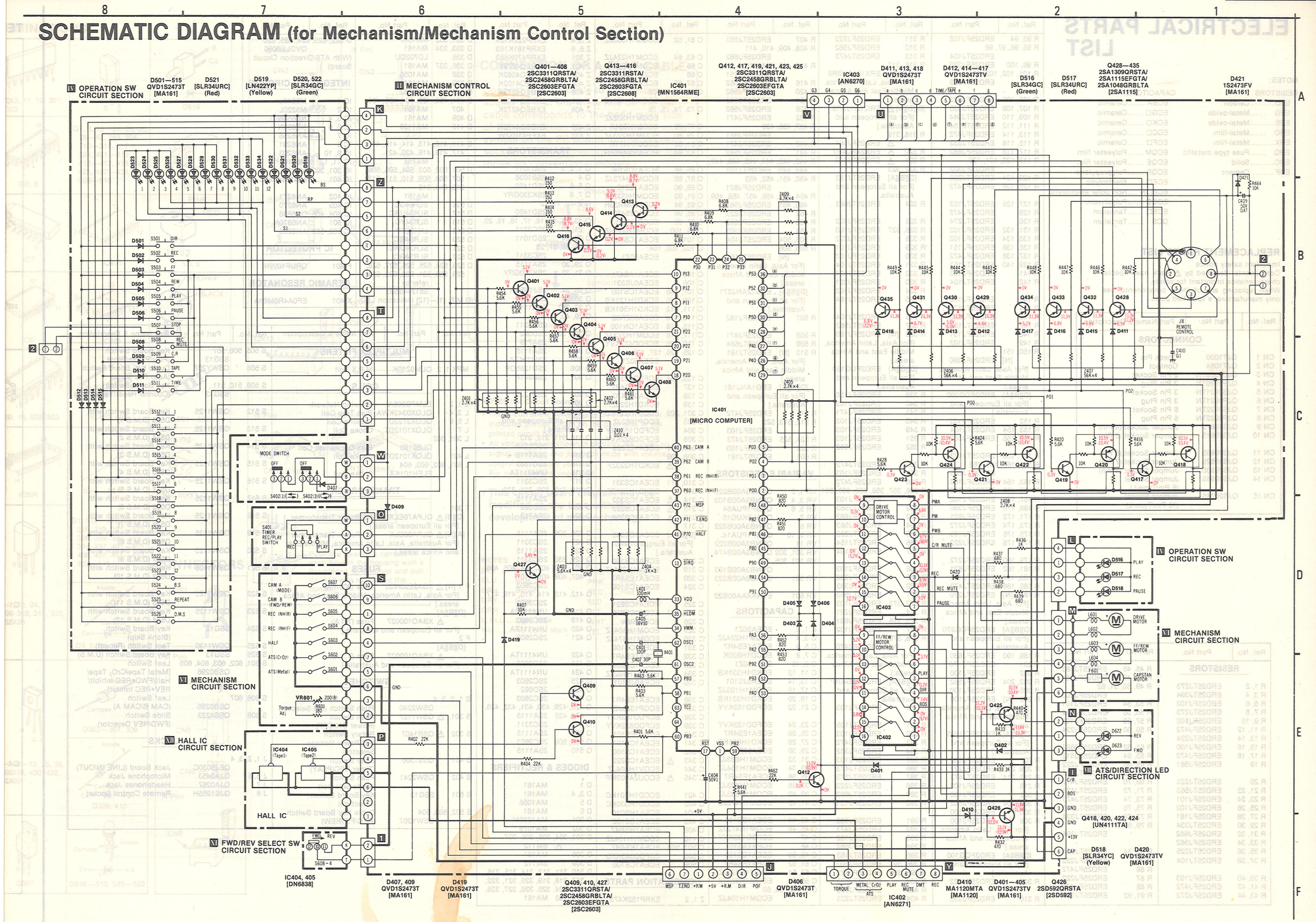

ELECTRICAL PARTS LIST

NOTES:

RESISTORS
- ERD.....Carbon
- ERG .....Metal-oxide
- ERS.....Metal-oxide
- ERO .....Metal-film
- ERX.....Metal-film
- ERQ .....Fuse type metallic
- ERC.....Solid
- ERF.....Cement

CAPACITORS
- ECBA .....Ceramic
- ECG□ .....Ceramic
- ECK□ .....Ceramic
- ECC□ .....Ceramic
- ECF□ .....Ceramic
- ECQM .....Polyester film
- ECQE .....Polyester film
- ECQF .....Polypropylene
- ECE□ .....Electrolytic
- ECEON ...Non polar electrolytic
- ECQS .....Polystyrene
- ECS□ .....Tantalum
- QCS .....Tantalum

REPLACEMENT PARTS LIST

Important safety notice
Components identified by ⚠ mark have special characteristics important for safety.
When replacing any of these components, use only manufacturer's specified parts.

Ref. No.	Part No.	Part Name & Description
		CONNECTORS
CN 1	QJT1090	Check Pin
CN 2	QJT1054	Contact
CN 3	QJS1920TN	2 Pin Socket
CN 4	QJP1920TN	2 Pin Plug
CN 5	QJS1921TN	3 Pin Socket
CN 6	QJP1921TN	3 Pin Plug
CN 7	QJS1922TN	6 Pin Socket
CN 8	QJP1922TN	6 Pin Plug
CN 9	QJS1987S	Jumper Socket (4 Pin)
CN 10	QJS1961S	Jumper Socket (5 Pin)
CN 11	QJS1993S	Jumper Socket (6 Pin)
CN 12	QJS1962S	Jumper Socket (7 Pin)
CN 13	QJS1983S	Jumper Socket (8 Pin)
CN 14	QJS1994S	Jumper Socket (6 Pin/Type-L)
CN 15	QJS2004S	Jumper Socket (10 Pin/Type-L)

Ref. No.	Part No.	Ref. No.	Part No.
	RESISTORS	R 45, 46	ERD25TJ183
		R 47, 48	ERD25FJ181
R 1, 2	ERD25TJ273	R 49, 50, 51, 52	ERD25FJ103
R 3, 4	ERD25TJ394	R 53, 54	ERD25FJ101
R 5, 6	ERD25FJ102	R 55, 56	ERD25FJ512
R 7, 8	ERD25TJ273	R 57, 58	ERD25FJ102
R 9, 10	ERD25FJ102	R 59, 60	ERD25TJ224
R 11, 12	ERD25FJ472	R 61, 62	ERD25TJ683
R 13, 14	ERD25TJ224	R 63, 64	ERD25FJ512
R 15, 16	ERD25FJ100	R 65, 66	ERD25FJ222
R 17, 18	ERD25FJ472	R 67, 68	ERD25TJ823
R 19	ERD25FJ561	R 69, 70	ERD25FJ472
R 20	ERD25TJ223	R 71, 72	ERD25TJ123
R 21, 22	ERD25TJ563	R 73, 74	ERD25TJ473
R 23, 24	ERD25FJ101	R 75, 76	ERD25TJ753
R 25, 26	ERD25FJ102	R 77, 78	ERD25TJ334
R 27, 28	ERD25FJ181	R 79, 80, 81, 82	ERD25TJ394
R 29, 30	ERD25TJ334		
R 31, 32	ERD25FJ682	R 83, 84	ERD25TJ334
R 33, 34	ERD25FJ562	R 85	ERD25FJ222
R 35, 36	ERD25TJ225	R 86	ERD25FJ472
R 37, 38	ERD25TJ104	R 87	ERD25FJ222
R 39, 40	ERD25FJ103	R 88	ERD25FJ472
R 41, 42	ERD25FJ472	R 91, 92	ERD25TJ153
R 43, 44	ERD25FJ272		

Ref. No.	Part No.
R 93, 94	ERD25FJ102
R 95, 96, 97, 98	ERD25TJ104
R 99, 100	ERD25FJ332
R 101, 102, 103, 104	ERD25TJ223
R 105, 106	ERD25FJ822
R 107, 108	ERD25TJ333
R 109, 110	ERD25TJ244
R 111, 112	ERD25TJ154
R 113, 114	ERD25FJ472
R 115, 116	ERD25TJ333
R 117, 118	ERD25FJ682
R 119, 120, 121, 122	ERD25FJ332
R 123, 124	ERD25TJ223
R 125, 126	ERD25FJ472
R 127, 128	ERD25TJ153
R 129	ERD25FJ472
R 130	ERD25TJ274
R 131, 132	ERD25FJ102
R 133, 134	ERD25FJ103
R 135, 136	ERD25FJ151
R 137, 138	ERD25FJ472
R 139, 140	ERD25TJ153
R 141	ERD25FJ103
R 142	ERD25TJ104
R 143	ERD25FJ102
R 144	ERD25TJ473
R 145	ERD25FJ222
R 147	ERD25TJ153
R 148	ERD25FJ151
R 149	ERD25FJ102
R 150, 151	
[N]	ERD25FJ390
[For Asia, Latin America, Middle East and Africa areas.]	
[D][B][A]	ERD2FCG390
[For all European and Australia.]	
R 152	ERD25FJ103
R 153, 154	ERD25TJ104
R 155, 156	ERD25FJ102
R 157, 158	ERD25TJ123
R 159, 160, 161, 162	ERD25TJ225
R 163, 164	ERD25FJ182
R 165, 166	ERD25FJ682
R 167, 168	ERD25FJ102
R 169, 170	ERD25FJ390
R 171, 172	ERD25FJ821
R 173, 174	ERD25FJ272
R 175, 176	ERD25FJ103
R 177, 178	ERD25FJ222
R 179, 180	ERD25FJ272
R 181, 182	ERD25FJ821
R 183, 184	ERD25FJ101
R 185, 186	ERD25TJ473
R 187 [N]	ERD25FJ270
[For Asia, Latin America, Middle East and Africa areas.]	
[D][B][A]	ERD25FCG270
[For all European and Australia.]	
R 189, 190	ERD25FJ680
R 201	ERD25FJ1R0
R 202	ERD25FJ100
R 203, 204	ERD25FJ562
R 205	ERD25FJ100
R 206 [N]	ERD25FJ100
[For Asia, Latin America, Middle East and Africa areas.]	
[D][B][A]	ERD2FCG100
[For all European and Australia.]	
R 207	ERD25FJ332
R 209, 210	ERD25FJ222
R 213, 214	ERD25TJ473
R 216	ERD25FJ103
R 302	ERD25FJ100
R 303, 304	ERD25FJ562
R 305	ERD25FJ100
R 306 [N]	ERD25FJ100
[For Asia, Latin America, Middle East and Africa areas.]	
[D][B][A]	ERD2FCG100
[For all European and Australia.]	
R 307	ERD25FJ222
R 310	ERD25FJ332

Ref. No.	Part No.
R 311	ERD25FJ222
R 312	ERD25FJ562
R 313	ERD25TJ473
R 316, 317	
[N] ⚠	ERX12ANJ3R9
[For Asia, Latin America, Middle East and Africa areas.]	
[D][B][A] ⚠	ERQ12HJ3R9
[For all European and Australia.]	
R 318, 319	
⚠	ERD25FJ681
R 320 ⚠	ERX2ANJ4R7
R 321 ⚠	ERD25FJ102
R 322, 323	
[D][B][A]	ERD25TJ153
[For all European and Australia.]	
R 324	ERD25TJ683
R 325	ERD25FJ472
R 326, 327	ERD25FJ103
R 328	ERD25FJ272
R 329	ERD25FJ101
R 330	ERD25FJ103
R 331	ERD25TJ104
R 332	ERD25TJ124
R 333	ERD25FJ221
R 334	ERD25FJ102
R 335	ERD25TJ184
R 336	ERD25TJ104
R 337	ERD25TJ563
R 338 [N]	ERD25FJ180
[For Asia, Latin America, Middle East and Africa areas.]	
[D][B][A]	ERD2FCG180
[For all European and Australia.]	
R 339	ERD25FJ120
R 340	ERD25FJ103
R 341	ERD25FJ471
R 345	ERD25FJ103
R 349	ERD25FJ103
R 351	ERD25FJ103
R 352	ERD25FJ562
R 353	ERD25TJ473
R 354	ERD25FJ103
R 355	ERD25FJ472
R 356, 357, 358, 359, 360, 361	ERD25FJ103
R 362	ERD25TJ563
R 363	ERD25FJ682
R 364	ERD25TJ563
R 365	ERD25TJ223
R 366	ERD25TJ154
R 367	ERD25TJ104
R 368	ERD25FJ103
R 369	ERD25FJ332
R 370	ERD25TJ333
R 371	ERD25TJ563
R 372, 373	ERD25FJ103
R 374	ERD25FJ221
R 375, 376	ERD25FJ681
R 377	ERD25FJ102
R 378, 379	
[N]	ERD25FJ470
[For Asia, Latin America, Middle East and Africa areas.]	
[D][B][A]	ERD2FCG470
[For all European and Australia.]	
R 380	ERD25FJ103
R 381	ERD25TJ105
R 382	ERD25FJ103
R 383	ERD25FJ472
R 384	ERD25FJ332
R 385	ERD25FJ103
R 386	ERD25TJ473
R 387	ERD25TJ273
R 388	ERD25FJ222
R 389	ERD25TJ683
R 390	ERD25FJ101
R 391	ERD25FJ682
R 392	ERD25FJ471
R 393	ERD25FJ102
R 394	ERD25FJ682
R 395	ERD25TJ183
R 396, 397	ERD25TJ103
R 398, 399	ERD25FJ472
R 402	ERD25TJ223
R 403	ERD25FJ562
R 404	ERD25TJ223

Ref. No.	Part No.
R 407	ERD25TJ103
R 408, 409, 410, 411	ERD25FJ682
R 412, 413, 414, 415	ERD25FJ151
R 416	ERD25FJ562
R 420	ERD25FJ562
R 424	ERD25FJ562
R 428	ERD25FJ562
R 432	ERD25FJ471
R 437, 438, 439	ERD25FJ681
R 440	ERD25FJ471
R 441	ERD25FJ562
R 442, 443, 444, 445, 446, 447, 448, 449	ERD25TJ103
R 450, 451, 452, 453	ERD25FJ821
R 454, 455, 456, 457, 458, 459, 460, 461	ERD25FJ562
R 462	ERD25TJ223
R 463	ERD25FJ562
R 464	ERD25FJ103
R 503, 504	ERD25TJ104
R 505, 506	
[N]	ERD25TJ181
[For Asia, Latin America, Middle East and Africa areas.]	
[D][B][A]	ERG12ANJ271
[For all European and Australia.]	
R 507	ERD25FJ182
R 508	ERD25FJ471
R 509	ERD25TJ684
R 510 [N]	ERD25TJ181
[For Asia, Latin America, Middle East and Africa areas.]	
[D][B][A]	ERG1ANJ181
[For all European and Australia.]	
R 511	ERD25FJ472
R 512, 513, 523	ERD25FJ103
R 524, 525	ERD25TJ473
R 526	ERD25FJ103
R 601	ERD25TJ181
	VARIABLE RESISTORS
VR 1, 2	QVNB3A00B223
VR 3, 4	QVNB3A00B103
VR 5, 6	QVBP1PUA54
VR 7	QVAL5KUG15
VR 8	QVNB3A00B222
VR 9, 10	QVBF1PUA14
VR 11	QVNB3A00B222
VR 301, 302	QVNB3A00B474
VR 303, 305, 306	QVNB3A00B103
VR 501	QVNB3A00B223
VR 601	EVNK4AA00B22
	CAPACITORS
C 1, 2	ECEA50Z1
C 3, 4	ECQM1H224JZ
C 5, 6	ECEA1ES4R7
C 7, 8	ECCD1H820K
C 9, 10	ECEA50Z1
C 11, 12	ECKD1H331KB
C 13, 14	ECEA0JS101
C 17, 18	ECQM1H103JZ
C 19, 20	ECKD1H331KB
C 21, 22	ECFDD152KVY
C 23, 24	ECFDD122KVY
C 25, 26	ECEA1ES4R7
C 27, 28	ECKD1H681KB
C 29, 30	ECEA50Z1
C 31, 32	ECQM1H683JZ
C 33, 34	ECQM1H154JZ
C 35, 36	ECEA1ES4R7
C 37, 38	ECQM1H103JZ
C 39, 40	ECQM1H333JZ
C 41, 42	ECQM1H472JZ
C 43, 44	ECEA1CS100
C 45, 46	ECQM1H472JZ
C 47	ECFDD103KXY
C 48	ECEA1AS101
C 49, 50	ECEA1CS100
C 51, 52	ECEA1ES4R7
C 53, 54	ECQM1H473JZ
C 55, 56	ECQM1H333JZ
C 57, 58, 59, 60	ECQM1H104JZ

Ref. No.	Part No.
C 61, 62	ECQM1H333JZ
C 63, 64	ECQM1H224JZ
C 65	ECQM1H822JZ
C 66	ECEA1EN3R3
C 67, 68	ECEA50ZR22
C 69, 70, 71, 72	ECQM1H104JZ
C 73, 74, 75, 76	ECQM1H332JZ
C 77, 78	ECCD1H331K
C 79, 80	ECQM1H223JZ
C 81, 82	ECCD1H471K
C 83, 84	ECEA50MR68R
C 85, 86	ECEA1CS100
C 87, 88	ECQM1H472JZ
C 89, 90	ECEA16Z10
C 91, 92	ECQM1H333JZ
C 93, 94	ECEA50MR33R
C 95, 96	ECEA0JS470
C 97, 98	ECCD1H391J
C 99, 100	ECQM1H223JZ
C 101	ECEA1CS100
C 102, 103, 104	ECEA50Z1
C 105	ECEA1AS471
C 106	ECEA0JS331
C 107, 108	ECEA1CS100
C 109, 110	ECKD2H121KB
C 111, 112	ECKD1H561KB
C 113, 114	ECEA50ZR33
C 115, 116	ECEA1CN100
C 117, 118	ECQM1H273JZ
C 119, 120	ECFDD472KVY
C 125, 126, 127, 128	ECEA50Z1
C 133, 134	ECFDD223KXY
C 137	ECEA1ES4R7
C 138	ECEA0JS470
C 139	ECKD1H223ZF
C 301, 302	ECCD1H221KD
C 303	ECQP1682JZ
C 304	ECFDD153KXY
C 305	ECFDD822KVY
C 306, 307	ECEA1ES220
C 308, 309	
⚠	ECKD1H223ZF
C 310, 311	ECEA1CS331
C 312	ECKD1H223ZF
C 314 ⚠	ECEA1CS332
C 315 ⚠	ECEA1CS222
C 316 ⚠	ECEA1CS332
C 317	
[D][B][A]	ECEA1CS330
[For all European and Australia.]	
C 318	ECEA1CS100
C 319	ECQM1H394JZ
C 320	ECEA1ES4R7
C 324	ECEA1CS100
C 325	ECEA1CS221
C 326, 327	ECEA1CS330
C 328	ECEA50Z1
C 329	ECQM1H104JZ
C 330	ECQM1H474JZ
C 331	ECEA1CS100
C 332	ECEA1ES4R7
C 333	ECEA1ES220
C 334	ECQM1H102JZ
C 335	ECEA0JS101
C 336	ECEA1ES4R7
C 337	ECQP1333JZ
C 338	ECFDD153KXY
C 339	ECFDD822KVY
C 340	ECEA1ES101
C 341	ECEA1CS101
C 342	ECEA1CS100
C 343 ⚠	ECEA1CS222
C 344	ECQV1H104JZ
C 345 ⚠	ECQU2A103MF
C 401	ECCD1H101KC
C 402	ECCD1H330KC
C 404	ECEA1HS010
C 405	ECEA1CS100
C 409	ECEA1HSR47
C 410	ECQM1H104JZ
C 501, 502	ECEA1ES4R7
C 505	ECFDD393KXD
C 506	ECEA1CS100
	COMBINATION PARTS
Z 1, 2	EXRP152K473

Ref. No.	Part No.
Z 3, 4	EXRP220K124
Z 5, 6	EXRP181K153
Z 301	EXRP470K683
Z 401, 402	EXBEQ4272K
Z 403	EXBEQ4562K
Z 404	EXBEQ4102K
Z 405	EXBEQ4272K
Z 406, 407	EXBEQ4563K
Z 408	EXBEQ4272K
Z 409	EXBEQ4472K
Z 410	EXFP4103ZW
	TRANSISTORS
Q 1, 2, 3	2SD1011
Q 4	2SB1036
Q 5, 6	2SD1450
Q 7, 8	2SK330GRY
Q 9, 10, 11, 12	2SD1450
Q 13, 14, 15, 16, 17, 18, 19, 20, 21, 22	2SC3311
Q 23, 24	2SD1011
Q 25, 26, 27, 28	2SC3311
Q 29, 30	2SA1115
Q 31, 32	2SK330GRY
Q 33, 34	2SJ105GR
Q 35, 36	2SD1450
Q 37, 38	2SA1115
Q 39, 40, 41, 42	2SC3311
Q 301, 302	2SD592
Q 303	2SA719
Q 304	2SA1115
Q 305	UN4211TA
Q 306	2SD1265OP
Q 307	2SB941P
Q 308	2SD1275
Q 309	
[D][B][A]	2SC3311
[For all European and Australia.]	
Q 310, 311, 312, 313	2SC3311
Q 314	2SA1115
Q 315	2SC1383
Q 316	UN4211TA
Q 317	2SC3311
Q 318, 319, 320, 321, 322	2SA1115
Q 323	2SD592
Q 324	2SA719
Q 325, 326	2SA1115
Q 327	2SC3311
Q 328	2SA1115
Q 329, 330	2SC3311
Q 401, 402, 403, 404, 405, 406, 407, 408, 409, 410	2SC2603
Q 412, 413, 414, 415, 416, 417	2SC2603
Q 418	UN4111TA
Q 419	2SC2603
Q 420	UN4111TA
Q 421	2SC2603
Q 422	UN4111TA
Q 423	2SC2603
Q 424	UN4111TA
Q 425	2SC2603
Q 426	2SD592
Q 427	2SC2603
Q 428, 429, 430, 431, 432, 433, 434, 435	2SA1115
Q 501	2SC3311
Q 502	2SA1115
Q 508, 509	2SC2603
Q 510	2SA1115
	DIODES & RECTIFIERS
D 1	MA161
D 3, 4	MA161
D 5	MA1056
D 6	MA161
D 301	MA1220M
D 302	MA1075
D 303, 304, 305, 306, 307 ⚠	SM112
D 308	MA161
D 309	SM112
D 310, 311, 312, 314, 315, 316, 317, 318, 319, 320, 321, 322, 323, 324, 325, 326, 327, 328, 329, 330	MA161

Ref. No.	Part No.
D 331, 332	MA1047
D 333, 334	MA161
D 335	LD702DU
D 336, 337	MA161
D 338	MA1056
D 339	MA161
D 340	MA1062
D 401, 402, 403, 404, 405, 406, 407	MA161
D 409	MA161
D 410	MA1120
D 411, 412, 413, 414, 415, 416, 417, 418, 419, 420, 421	MA161
D 501, 502, 503, 504, 505, 506, 507, 508, 509, 510, 511, 512, 513, 514, 515	MA161
D 516	SLR34GC
D 517	SLR34URC
D 518	SLR34YC
D 519	LN422YP
D 520	SLR34GC
D 521	SLR34URC
D 522	SLR34GC
D 523, 524, 525, 526, 527, 528, 529, 530, 531, 532, 533, 534	refer to S512—S523
(D.M.S. [1]—[12] Indication LED)	

Ref. No.	Part No.
D 622, 623, 624, 625, 626	QVDLS0050
(With ATS/Direction Circuit Board)	
	INTEGRATED CIRCUITS
IC 1	M5218L
IC 2	M5220L
IC 3, 4	NE654N
IC 5, 6	NE652N
IC 7	AN6258
IC 8	AN6291
IC 9, 10	AN6203
IC 11, 12	M5218L
IC 301, 302	M5218L
IC 401	MN1564RME
IC 402	AN6271
IC 403	AN6270
IC 404, 405	DN6838
IC 501	AN6870N
IC 502, 503	AN6280
	IC PROTECTOR
F 601	QRUF10WH
	CERAMIC RESONATOR
X 401	EF0A4R0M01A

Ref. No.	Part No.	Part Name & Description
		MULTIPLEX FILTERS
MPX 1, 2	QLM9Z10K	M.P.X Coil
		COILS
L 1, 2	ELM7Q306A	Skewing Network
L 3, 4	QLQX0343KWA	Bias Trap Coil
L 5, 6	QLQX2722D	Peaking Coil
L 7	QLQX1012DT	Choke Coil
L 301, 302	QLB0198	Bias Oscillation Coil
L 401	QLQX1012DT	Choke Coil
L 601, 602, 603, 604	ELEH101KA	Choke Coil
		TRANSFORMER
T 301		
[D][B] ⚠	QLPA76ELX	AC Power Transformer
[For all European areas.]		
[A][N] ⚠	QLPA88ELX	AC Power Transformer
[For Australia, Asia, Latin America, Middle East and Africa areas.]		
		FUSES
F 1 [N] ⚠	XBA2E03NS5	Fuse (300mA)
[For Asia, Latin America, Middle East and Africa areas.]		
[D][B][A]		
⚠	XBAQ100027	Fuse (T 1A)
[For all European and Australia.]		
F 2		
[D][B][A]		
⚠	XBAQ100027	Fuse (T 1A)
[For all European and Australia.]		
		SWITCHES
S 1, 2, 3, 4	QSW2240	Push Switch (NR Selector)
S 301 ⚠	QSW1127	Push Switch (Power ON/OFF)
S 302 ⚠	QSR1407	Rotary Switch (AC Power Voltage Selector)
S 401	QSS1306	Slide Switch (Timer REC/PLAY)
S 402	QSW2241	Push Switch (Mode Selector)
S 501	SSG13	Key Board Switch (Direction)
S 502, 503, 504	QSWY207	Duble Key Board Switch (REC/F.F/REW)

Ref. No.	Part No.	Part Name & Description
S 505, 506, 507	SSG13	Key Board Switch (Play/Pause/Stop)
S 508	QSWY207	Duble Key Board Switch (Auto Rec Muto)
S 509, 510, 511	SSG13	Key Board Switch (Counter Reset/Tape/Time)
S 512	QSW1125	Key Board Switch with D523 (D.M.S 1)
S 513	QSW1125	Key Board Switch with D524 (D.M.S 2)
S 514	QSW1125	Key Board Switch with D525 (D.M.S 3)
S 515	QSW1125	Key Board Switch with D526 (D.M.S 4)
S 516	QSW1125	Key Board Switch with D527 (D.M.S 5)
S 517	QSW1125	Key Board Switch with D528 (D.M.S 6)
S 518	QSW1125	Key Board Switch with D529 (D.M.S 7)
S 519	QSW1125	Key Board Switch with D530 (D.M.S 8)
S 520	QSW1125	Key Board Switch with D531 (D.M.S 9)
S 521	QSW1125	Key Board Switch with D532 (D.M.S 10)
S 522	QSW1125	Key Board Switch with D533 (D.M.S 11)
S 523	QSW1125	Key Board Switch with D534 (D.M.S 12)
S 524	SSG13	Key Board Switch (Blank Skip)
S 525	QSW1130	Tact Switch (Repeat)
S 526	SSG13	Key Board Switch (D.M.S)
S 601, 602, 603, 604, 605	QSB0296	Leaf Switch [Metal Tape/CrO_2 Tape/ Half/FWD•REC Inhibit/ REV•REC Inhibit]
S 606, 607	QSB0295	Leaf Switch (CAM B/CAM A)
S 608	QSS4223	Slide Switch (FWD/REV Detector)
		JACKS
J 1, 2, 3, 4	QEJ5030C	Jack Board (LINE IN/OUT)
J 5, 6	QJA0453	Microphone Jack
J 7	QJA0267	Headphones Jack
J 8	QJS1955H	Remote Control Socket

TERMINATIONS

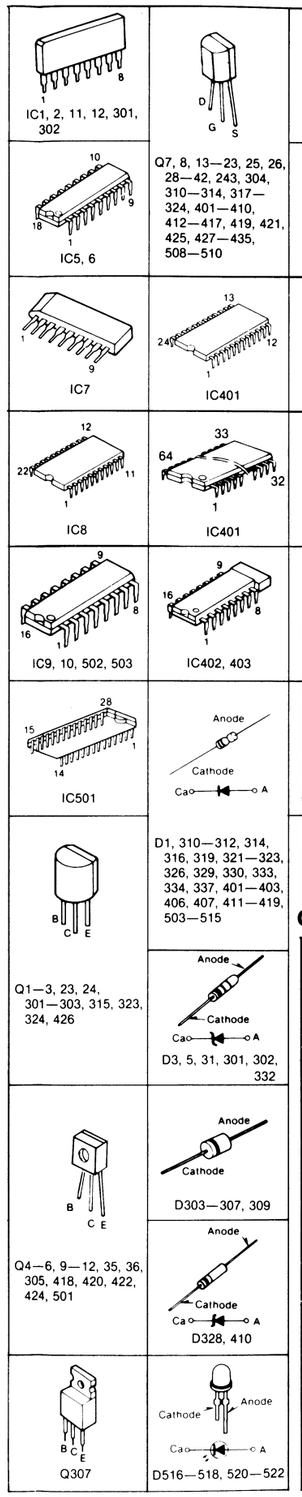

Part No.
ERD25TJ103
410, 411
ERD25FJ682
414, 415
ERD25FJ151
ERD25FJ562
ERD25FJ562
ERD25FJ562
ERD25FJ562
ERD25FJ471
439
ERD25FJ681
ERD25FJ471
ERD25FJ562
444, 445, 446, 447,
ERD25TJ103
452, 453
ERD25FJ821
456, 457, 458, 459,
ERD25FJ562
ERD25TJ223
ERD25FJ562
ERD25FJ103
ERD25TJ104
ERD25TJ181
a, Latin America,
East and Africa
ERG12ANJ271
European and
a.]
ERD25FJ182
ERD25FJ471
ERD25TJ684
ERD25TJ181
a, Latin America,
East and Africa
ERG1ANJ181
European and
a.]
ERD25FJ472
523
ERD25FJ103
ERD25TJ473
ERD25FJ103
ERD25TJ181
E RESISTORS
QVNB3A00B223
QVNB3A00B103
QVBP1PUA54
QVAL5KUG15
QVNB3A00B222
QVBF1PUA14
QVNB3A00B222
QVNB3A00B474
, 306
QVNB3A00B103
QVNB3A00B223
EVNK4AA00B22
ACITORS
ECEA50Z1
ECQM1H224JZ
ECEA1ES4R7
ECCD1H820K
ECEA50Z1
ECKD1H331KB
ECEA0JS101
ECQM1H103JZ
ECKD1H331KB
ECFDD152KVY
ECFDD122KVY
ECEA1ES4R7
ECKD1H681KB
ECEA50Z1
ECQM1H683JZ
ECQM1H154JZ
ECEA1ES4R7
ECQM1H103JZ
ECQM1H333JZ
ECQM1H472JZ
ECEA1CS100
ECQM1H472JZ
ECFDD103KXY
ECEA1AS101
ECEA1CS100
ECEA1ES4R7
ECQM1H473JZ
ECQM1H333JZ
60
ECQM1H104JZ

Ref. No.	Part No.
C 61, 62	ECQM1H333JZ
C 63, 64	ECQM1H224JZ
C 65	ECQM1H822JZ
C 66	ECEA1EN3R3
C 67, 68	ECEA50ZR22
C 69, 70, 71, 72	ECQM1H104JZ
C 73, 74, 75, 76	ECQM1H332JZ
C 77, 78	ECCD1H331K
C 79, 80	ECQM1H223JZ
C 81, 82	ECCD1H471K
C 83, 84	ECEA50MR68R
C 85, 86	ECEA1CS100
C 87, 88	ECQM1H472JZ
C 89, 90	ECEA16Z10
C 91, 92	ECQM1H333JZ
C 93, 94	ECEA50MR33R
C 95, 96	ECEA0JS470
C 97, 98	ECCD1H391J
C 99, 100	ECQM1H223JZ
C 101	ECEA1CS100
C 102, 103, 104	ECEA50Z1
C 105	ECEA1AS471
C 106	ECEA0JS331
C 107, 108	ECEA1CS100
C 109, 110	ECKD2H121KB
C 111, 112	ECKD1H561KB
C 113, 114	ECEA50ZR33
C 115, 116	ECEA1CN100
C 117, 118	ECQM1H273JZ
C 119, 120	ECFDD472KVY
C 125, 126, 127, 128	ECEA50Z1
C 133, 134	ECFDD223KXY
C 137	ECEA1ES4R7
C 138	ECEA0JS470
C 139	ECKD1H223ZF
C 301, 302	ECCD1H221KD
C 303	ECQP1682JZ
C 304	ECFDD153KXY
C 305	ECFDD822KVY
C 306, 307	ECEA1ES220
C 308, 309	
⚠	ECKD1H223ZF
C 310, 311	ECEA1CS331
C 312	ECKD1H223ZF
C 314 ⚠	ECEA1CS332
C 315 ⚠	ECEA1CS222
C 316 ⚠	ECEA1CS332
C 317	
[D][B][A]	ECEA1CS330
[For all European and Australia.]	
C 318	ECEA1CS100
C 319	ECQM1H394JZ
C 320	ECEA1ES4R7
C 324	ECEA1CS100
C 325	ECEA1CS221
C 326, 327	ECEA1CS330
C 328	ECEA50Z1
C 329	ECQM1H104JZ
C 330	ECQM1H474JZ
C 331	ECEA1CS100
C 332	ECEA1ES4R7
C 333	ECEA1ES220
C 334	ECQM1H102JZ
C 335	ECEA0JS101
C 336	ECEA1ES4R7
C 337	ECQP1333JZ
C 338	ECFDD153KXY
C 339	ECFDD822KVY
C 340	ECEA1ES101
C 341	ECEA1CS101
C 342	ECEA1CS100
C 343 ⚠	ECEA1CS222
C 344	ECQV1H104JZ
C 345 ⚠	ECQU2A103MF
C 401	ECCD1H101KC
C 402	ECCD1H330KC
C 404	ECEA1HS010
C 405	ECEA1CS100
C 409	ECEA1HSR47
C 410	ECQM1H104JZ
C 501, 502	ECEA1ES4R7
C 505	ECFDD393KXD
C 506	ECEA1CS100

COMBINATION PARTS

Ref. No.	Part No.
Z 1, 2	EXRP152K473
Z 3, 4	EXRP220K124
Z 5, 6	EXRP181K153
Z 301	EXRP470K683
Z 401, 402	EXBEQ4272K
Z 403	EXBEQ4562K
Z 404	EXBEQ4102K
Z 405	EXBEQ4272K
Z 406, 407	EXBEQ4563K
Z 408	EXBEQ4272K
Z 409	EXBEQ4472K
Z 410	EXFP4103ZW

TRANSISTORS

Ref. No.	Part No.
Q 1, 2, 3	2SD1011
Q 4	2SB1036
Q 5, 6	2SD1450
Q 7, 8	2SK330GRY
Q 9, 10, 11, 12	2SD1450
Q 13, 14, 15, 16, 17, 18, 19, 20, 21, 22	2SC3311
Q 23, 24	2SD1011
Q 25, 26, 27, 28	2SC3311
Q 29, 30	2SA1115
Q 31, 32	2SK330GRY
Q 33, 34	2SJ105GR
Q 35, 36	2SD1450
Q 37, 38	2SA1115
Q 39, 40, 41, 42	2SC3311
Q 301, 302	2SD592
Q 303	2SA719
Q 304	2SA1115
Q 305	UN4211TA
Q 306	2SD1265OP
Q 307	2SB941P
Q 308	2SD1275
Q 309	
[D][B][A]	2SC3311
[For all European and Australia.]	
Q 310, 311, 312, 313	2SC3311
Q 314	2SA1115
Q 315	2SC1383
Q 316	UN4211TA
Q 317	2SC3311
Q 318, 319, 320, 321, 322	2SA1115
Q 323	2SD592
Q 324	2SA719
Q 325, 326	2SA1115
Q 327	2SC3311
Q 328	2SA1115
Q 329, 330	2SC3311
Q 401, 402, 403, 404, 405, 406, 407, 408, 409, 410	2SC2603
Q 412, 413, 414, 415, 416, 417	2SC2603
Q 418	UN4111TA
Q 419	2SC2603
Q 420	UN4111TA
Q 421	2SC2603
Q 422	UN4111TA
Q 423	2SC2603
Q 424	UN4111TA
Q 425	2SC2603
Q 426	2SD592
Q 427	2SC2603
Q 428, 429, 430, 431, 432, 433, 434, 435	2SA1115
Q 501	2SC3311
Q 502	2SA1115
Q 508, 509	2SC2603
Q 510	2SA1115

DIODES & RECTIFIERS

Ref. No.	Part No.
D 1	MA161
D 3, 4	MA161
D 5	MA1056
D 6	MA161
D 301	MA1220M
D 302	MA1075
D 303, 304, 305, 306, 307	
⚠	SM112
D 308	MA161
D 309	SM112
D 310, 311, 312, 314, 315, 316, 317, 318, 319, 320, 321, 322, 323, 324, 325, 326, 327, 328, 329, 330	MA161
D 331, 332	MA1047
D 333, 334	MA161
D 335	LD702DU
D 336, 337	MA161
D 338	MA1056
D 339	MA161
D 340	MA1062
D 401, 402, 403, 404, 405, 406, 407	MA161
D 409	MA161
D 410	MA1120
D 411, 412, 413, 414, 415, 416, 417, 418, 419, 420, 421	MA161
D 501, 502, 503, 504, 505, 506, 507, 508, 509, 510, 511, 512, 513, 514, 515	MA161
D 516	SLR34GC
D 517	SLR34URC
D 518	SLR34YC
D 519	LN422YP
D 520	SLR34GC
D 521	SLR34URC
D 522	SLR34GC
D 523, 524, 525, 526, 527, 528, 529, 530, 531, 532, 533, 534	refer to S512—S523
(D.M.S. [1]—[12] Indication LED)	
D 622, 623, 624, 625, 626	QVDLS0050
(With ATS/Direction Circuit Board)	

INTEGRATED CIRCUITS

Ref. No.	Part No.
IC 1	M5218L
IC 2	M5220L
IC 3, 4	NE654N
IC 5, 6	NE652N
IC 7	AN6258
IC 8	AN6291
IC 9, 10	AN6203
IC 11, 12	M5218L
IC 301, 302	M5218L
IC 401	MN1564RME
IC 402	AN6271
IC 403	AN6270
IC 404, 405	DN6838
IC 501	AN6870N
IC 502, 503	AN6280

IC PROTECTOR

Ref. No.	Part No.
F 601	QRUF10WH

CERAMIC RESONATOR

Ref. No.	Part No.
X 401	EF0A4R0M01A

MULTIPLEX FILTERS

Ref. No.	Part No.	Part Name & Description
MPX 1, 2	QLM9Z10K	M.P.X Coil

COILS

Ref. No.	Part No.	Part Name & Description
L 1, 2	ELM7Q306A	Skewing Network
L 3, 4	QLQX0343KWA	Bias Trap Coil
L 5, 6	QLQX2722D	Peaking Coil
L 7	QLQX1012DT	Choke Coil
L 301, 302	QLB0198	Bias Oscillation Coil
L 401	QLQX1012DT	Choke Coil
L 601, 602, 603, 604	ELEH101KA	Choke Coil

TRANSFORMER

Ref. No.	Part No.	Part Name & Description
T 301		
[D][B] ⚠	QLPA76ELX	AC Power Transformer
[For all European areas.]		
[A][N] ⚠	QLPA88ELX	AC Power Transformer
[For Australia, Asia, Latin America, Middle East and Africa areas.]		

FUSES

Ref. No.	Part No.	Part Name & Description
F 1 [N] ⚠	XBA2E03NS5	Fuse (300mA)
[For Asia, Latin America, Middle East and Africa areas.]		
[D][B][A]		
⚠	XBAQ100027	Fuse (T 1A)
[For all European and Australia.]		
F 2		
[D][B][A]		
⚠	XBAQ100027	Fuse (T 1A)
[For all European and Australia.]		

SWITCHES

Ref. No.	Part No.	Part Name & Description
S 1, 2, 3, 4	QSW2240	Push Switch (NR Selector)
S 301 ⚠	QSW1127	Push Switch (Power ON/OFF)
S 302 ⚠	QSR1407	Rotary Switch (AC Power Voltage Selector)
S 401	QSS1306	Slide Switch (Timer REC/PLAY)
S 402	QSW2241	Push Switch (Mode Selector)
S 501	SSG13	Key Board Switch (Direction)
S 502, 503, 504	QSWY207	Duble Key Board Switch (REC/F.F/REW)
S 505, 506, 507	SSG13	Key Board Switch (Play/Pause/Stop)
S 508	QSWY207	Duble Key Board Switch (Auto Rec Muto)
S 509, 510, 511	SSG13	Key Board Switch (Counter Reset/Tape/Time)
S 512	QSW1125	Key Board Switch with D523 (D.M.S 1)
S 513	QSW1125	Key Board Switch with D524 (D.M.S 2)
S 514	QSW1125	Key Board Switch with D525 (D.M.S 3)
S 515	QSW1125	Key Board Switch with D526 (D.M.S 4)
S 516	QSW1125	Key Board Switch with D527 (D.M.S 5)
S 517	QSW1125	Key Board Switch with D528 (D.M.S 6)
S 518	QSW1125	Key Board Switch with D529 (D.M.S 7)
S 519	QSW1125	Key Board Switch with D530 (D.M.S 8)
S 520	QSW1125	Key Board Switch with D531 (D.M.S 9)
S 521	QSW1125	Key Board Switch with D532 (D.M.S 10)
S 522	QSW1125	Key Board Switch with D533 (D.M.S 11)
S 523	QSW1125	Key Board Switch with D534 (D.M.S 12)
S 524	SSG13	Key Board Switch (Blank Skip)
S 525	QSW1130	Tact Switch (Repeat)
S 526	SSG13	Key Board Switch (D.M.S)
S 601, 602, 603, 604, 605	QSB0296	Leaf Switch [Metal Tape/CrO_2 Tape/ Half/FWD•REC Inhibit/ REV•REC Inhibit]
S 606, 607	QSB0295	Leaf Switch (CAM B/CAM A)
S 608	QSS4223	Slide Switch (FWD/REV Detector)

JACKS

Ref. No.	Part No.	Part Name & Description
J 1, 2, 3, 4	QEJ5030C	Jack Board (LINE IN/OUT)
J 5, 6	QJA0453	Microphone Jack
J 7	QJA0267	Headphones Jack
J 8	QJS1955H	Remote Control Socket

TERMINATIONS

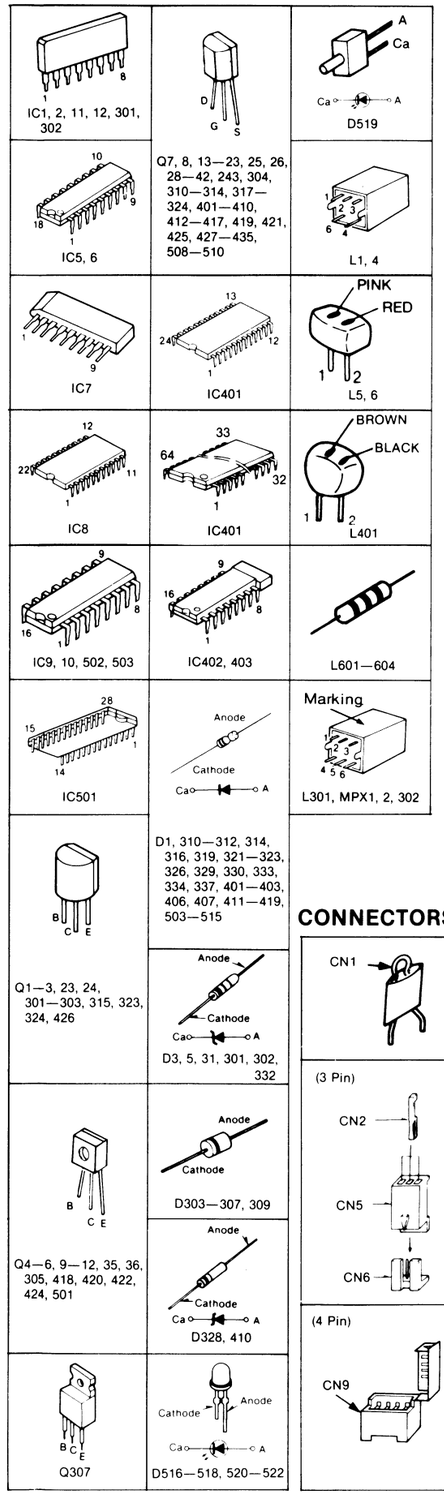

CONNECTORS

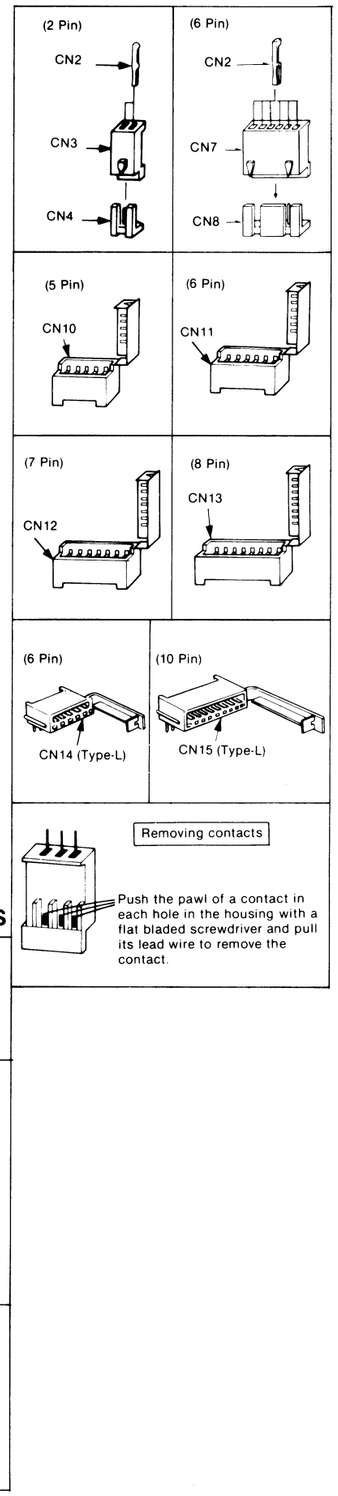

CONNECTION OF A FLAT CABLE

Connect the flat cable to the jumper socket so that the white line on the flat cable corresponds to the band mark side of the connection symbol (yellow or white symbol on the PC board) for the jumper socket. (This connection may differ from those for conventional models.)

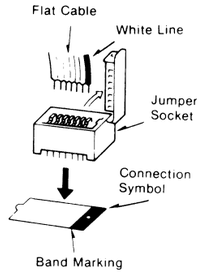

NOTES (for Circuit boards)

- The circuit shown in ▒▒▒ on the conductor side indicates printed circuit on the back side of the printed circuit board.
- All voltage values shown in circuitry are under no signal condition and playback mode with volume control at minimum position.
  For measurement, use VTVM.

- **This circuit board diagram may be modified at any time with the development of new technology.**

NOTES:

BLK .....Black	ORG .....Orange
BLU .....Blue	PNK .....Pink
BRN .....Brown	RED .....Red
GRY .....Gray	SLD .....Shield Wire
GRN .....Green	VLT .....Violet
L. BLU ....Light Blue	WHT .....White
NIL .....No Color Mark	YEL .....Yellow

CIRCUIT BOARDS AND WIRING CONNECTION DIAGRAM

NOTES:

- D .....For all European areas except United Kingdom.
- B .....For United Kingdom.
- N .....For Asia, Latin America, Middle East and Africa areas.
- A .....For Australia.

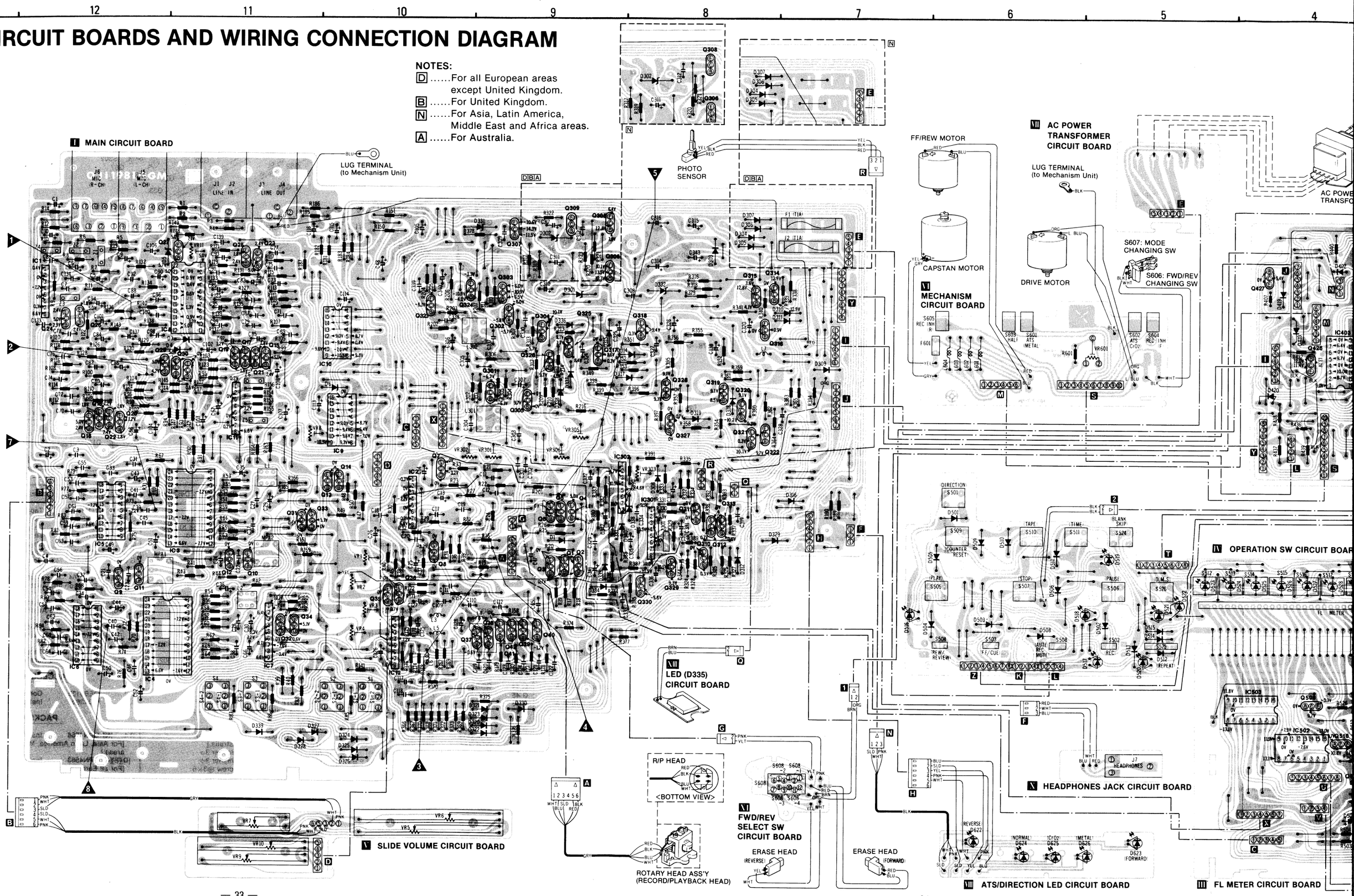

DIAGRAM

:
.For all European areas
except United Kingdom.
.For United Kingdom.
.For Asia, Latin America,
Middle East and Africa areas.
.For Australia.

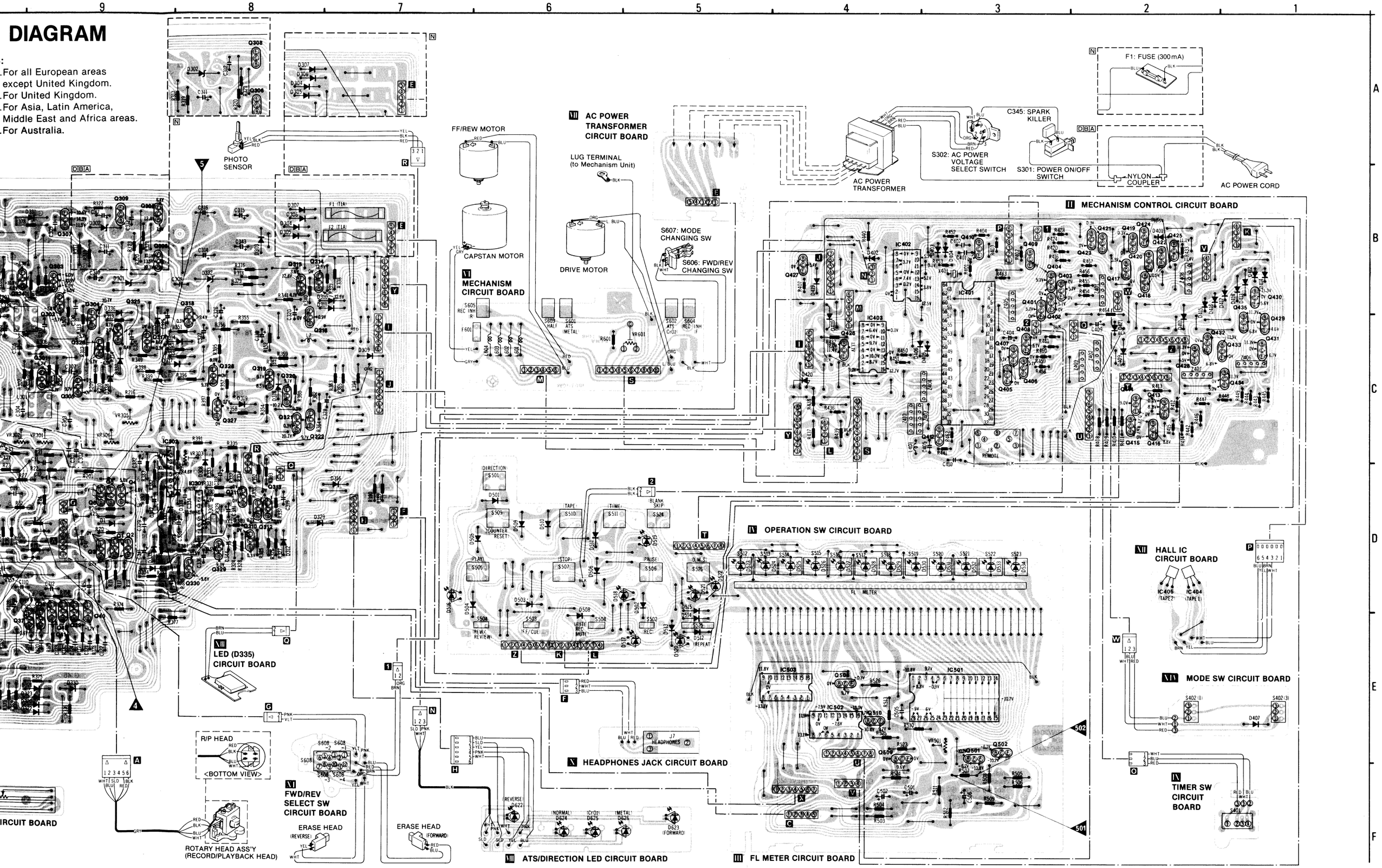

CIRCUIT BOARDS AND WIRING CONNECTION DIAGRAM

NOTES:
D .....For all European areas except United Kingdom.
B .....For United Kingdom.
N .....For Asia, Latin America, Middle East and Africa areas.
A .....For Australia.

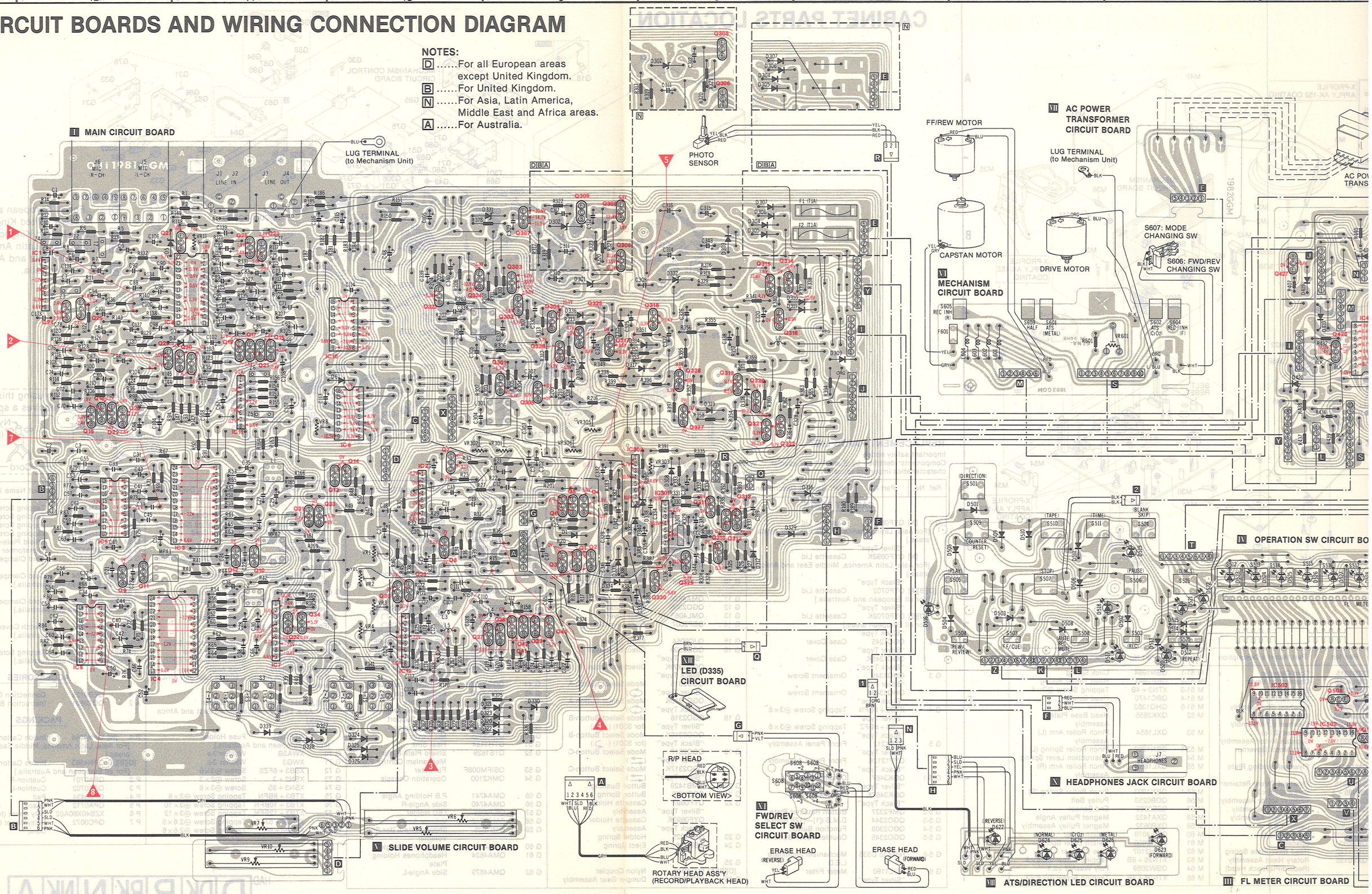

DIAGRAM

or all European areas
xcept United Kingdom.
or United Kingdom.
or Asia, Latin America,
iddle East and Africa areas.
or Australia.

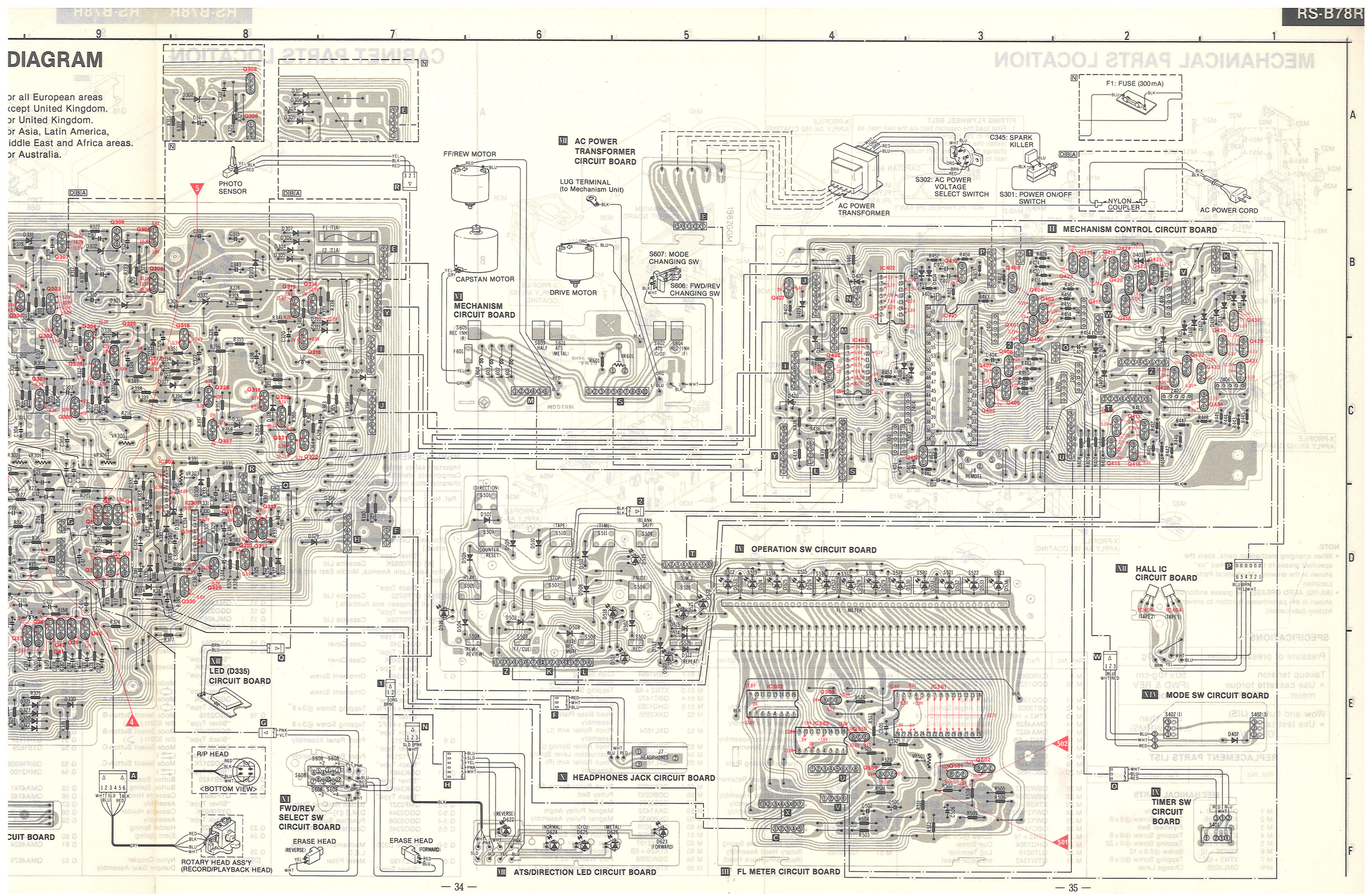

MECHANICAL PARTS LOCATION

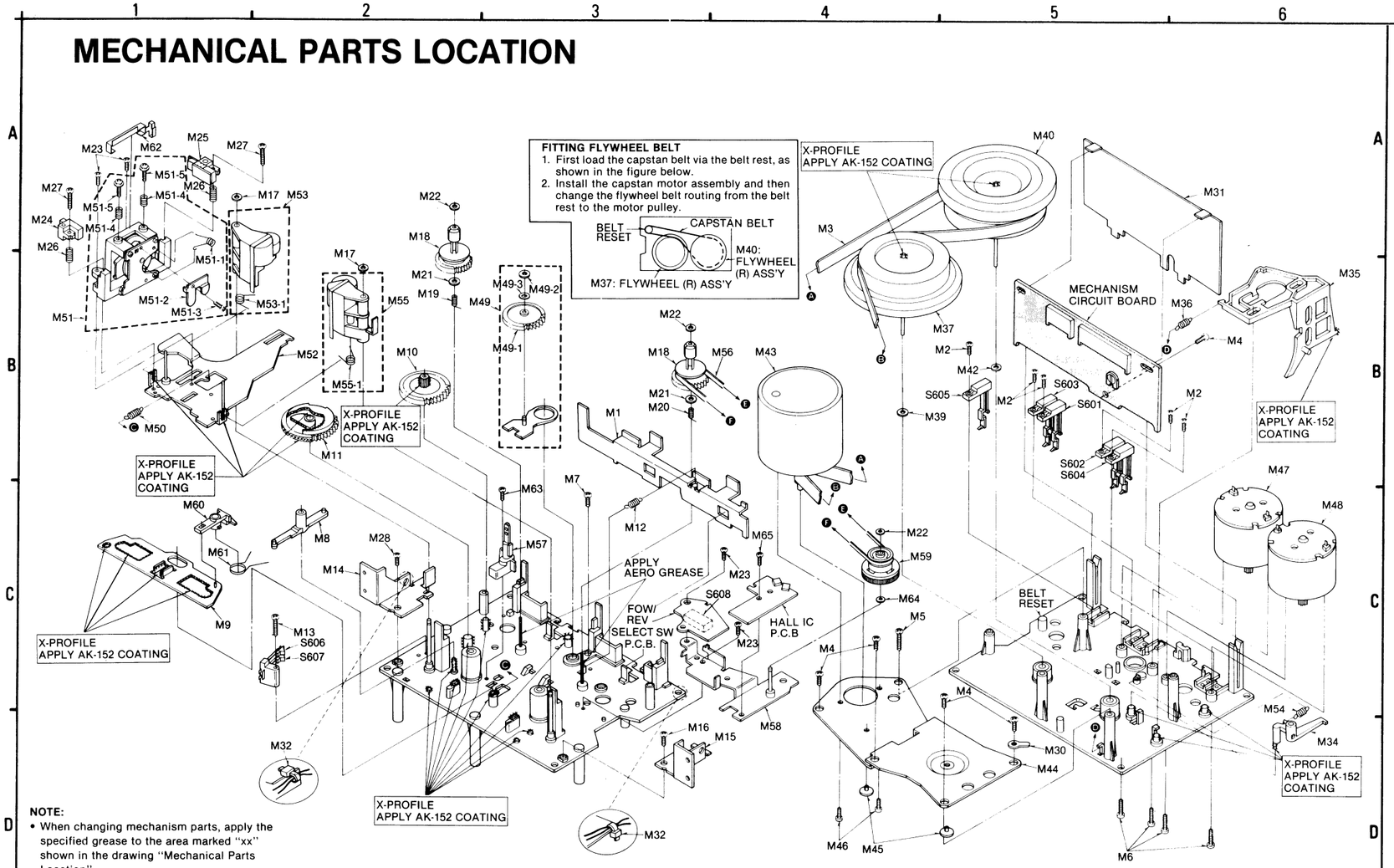

NOTE:

- When changing mechanism parts, apply the specified grease to the area marked "xx" shown in the drawing "Mechanical Parts Location".
- (AK-152, AERO GREASE) The grease and/or oil shown in th ' parentheses function to prevent friction (lubr cation).

SPECIFICATIONS

Pressure of pressure roller	400±50g
Takeup tension * Use cassette torque meter.....QZZSRKCT	50±10g-cm (FWD & REV mode)
Wow and flutter; (JIS) * Use test tape .....QZZCWAT	Less than 0.1% (WRMS)

REPLACEMENT PARTS LIST

Ref. No.	Part No.	Part Name & Description
		MECHANICAL PARTS
M 1	QMA4620	Eject Angle
M 2	XTN2+8B	Tapping Screw ⊕2×8
M 3	QDB0347	Flywheel Belt
M 4	XTN3+8B	Tapping Screw ⊕3×8
M 5	XTN3+22B	Tapping Screw ⊕3×22
M 6	XSN26+10	Screw ⊕2.6×10
M 7	XTN3+6B	Tapping Screw ⊕3×6
M 8	QML4025	Change Lever
M 9	QXR0963	Change Rod Assembly
M 10	QDG1325	Sub Gear
M 11	QDG1309	Main Gear
M 12	QBT2003	Eject Angle Spring
M 13	XTN2+14B	Tapping Screw ⊕2×14
M 14	QMA4628	Mechanism Angle-L
M 15	QMA4627	Mechanism Angle-R
M 16	XTN3+6B	Tapping Screw ⊕3×6
M 17	QBW2046	Washer (3φ)
M 18	QDR1173	Reel Table
M 19	QBC1449	Reel Table Spring-L
M 20	QBC1450	Reel Table Spring-R
M 21	QBW2012	Washer (2.1φ)
M 22	QBW2008	Washer (2φ)
M 23	XTN26+6B	Tapping Screw ⊕2.6×6
M 24	QWY2148YC	Erase Head (FWD)
M 25	QWY2148W	Erase Head (REV)
M 26	QBC1448	Erase Head Spring
M 27	XSN2+18	Screw ⊕2×18
M 28	QHQ1364	Cup Screw
M 30	QJT0015	Lug Terminal
M 31	QTW1342	Insulator Sheet
M 32	QTD1315	Cord Clamper
M 34	QML4026	Obstruction Lever
M 35	QMR2097	Eject Rod
M 36	QBT1947	Eject Rod Spring
M 37	QXF0221	Flywheel (R) Assembly
M 39	QBW2116	Washer (2.4φ)
M 40	QXF0220	Flywheel (L) Assembly
M 42	QBW2117	Washer (2.7φ)
M 43	QXU0331	Capstan Motor Assembly (with Motor Governor P.C.B.)
M 44	QMA4619	Flywheel Holding Plate
M 45	QMZ1315	Flywheel Thrust Retainer
M 46	XSN26+3	Screw ⊕2.6×3
M 47	QXU0332	FF/REW Motor Assembly
M 48	QXU0333	Drive Motor Assembly
M 49	QXG1076	Center Gear Assembly
M 49-1	QDG1307	Center Gear
M 49-2	QBW2007	Washer (2.5φ)
M 49-3	QBH0151	Spacer
M 50	QBT1742	Head Base Plate Spring
M 51	QXV0195	Rotary Head Assembly (Record/Playback Head)
M 51-1	QBN1994	Click Spring
M 51-2	QBP1993	Head Thrust Spring
M 51-3	XTN2+4B	Tapping Screw ⊕2×4
M 51-4	QBC1470	Head Spring
M 51-5	QHQ1352	Screw
M 52	QXK2855	Head Base Plate Assembly
M 53	QXL1654	Pinch Roller Arm (L) Assembly
M 53-1	QBN1992	Pinch Roller Spring (L)
M 54	QBT1962	Obstruction Lever Spring
M 55	QXL1655	Pinch Roller Arm (R) Assembly
M 55-1	QBN1993	Pinch Roller Spring (R)
M 56	QDB0253	Pulley Belt
M 57	QZE0063	End Sensor
M 58	QXA1432	Magnet Pulley Angle
M 59	QXP0632	Magnet Pulley Assembly
M 60	QML4078	Switch Lever
M 61	QBN2030	Switch Lever Spring
M 62	QMH2107	Wire Clamper
M 63	XTN26+8B	Tapping Screw ⊕2.6×8
M 64	QBW2059	Poly Washer φ2.1
M 65	XTN26+4B	Tapping Screw ⊕2.6×4

CABINET PARTS LOCATION

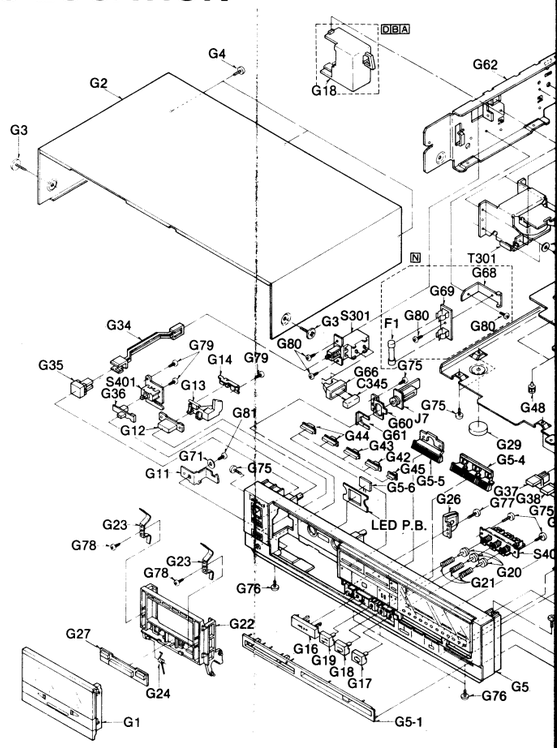

REPLACEMENT PARTS LIST

Important safety notice
Components identified by ⚠ mark have special characteristics important for safety.

When replacing any of these components, use only manufacturer's specified parts.

Ref. No.	Part No.	Part Name & Description	Ref. No.	Part No.	Part Name & Description	Ref. No.	Part No.
		CABINET PARTS		QGL1190K	Meter Filter "Black Type"	G 27	refer to D622—626
G 1 [N]	QYF0692	Cassette Lid [For Asia, Latin America, Middle East and Africa areas.] "Silver Type"	G 7	QGG0227	Slide Guide-A	G 28	QGC1247
[N]	QYF0692K	Cassette Lid [For Asia, Latin America, Middle East and Africa areas.] "Black Type"	G 8	QGG0229	Slide Guide-B "Silver Type"	G 29	QKA1094
[D][B][A]	QYF0702	Cassette Lid [For all European and Australia.] "Silver Type"		QGG0229K	Slide Guide-B "Black Type"	G 30	QMA4645
[D][B]	QYF0702K	Cassette Lid [For all European areas.] "Black Type"	G 9	QYT0657	Slide Knob-A Assembly (Output/Balance)	G 31	QKJ0609
G 2	QGC1245	Case Cover "Silver Type"	G 10	QYT0658	Slide Knob-B Assembly (Input)	G 32	QKJ0661
	QGC1245K	Case Cover "Black Type"	G 11	QMA4626	Holder Angle-L	G 33	QMK2130
G 3	QHQ1349	Ornament Screw "Silver Type"	G 12	QGO2306	Eject Button	G 34	QMR2059
	QHQ1349K	Ornament Screw "Black Type"	G 13	QML4063	Eject Lever	G 35	QGO2142
G 4	XTB3+8BFN	Tapping Screw ⊕3×8 "Silver Type"	G 14	QBP2007	Eject Lever Spring	G 36	QGT1642
	XTB3+8BFZ	Tapping Screw ⊕3×8 "Black Type"	G 15	QJC0064	Earth Plate	G 37	QGO2310
G 5	QYP1212	Front Panel Assembly "Silver Type"	G 16	QGO2309	Direction Button "Silver Type"	G 38	QGO2311
	QYP1212K	Front Panel Assembly "Black Type"		QGO2309K	Direction Button "Black Type"	G 39	QGO2312
G 5-1	QGK3467	Ornament Plate "Silver Type"	G 17	QGO2315	Mode Select Button-A "Silver Type" (⟲)	G 40	QGO2313
	QGK3467K	Ornament Plate "Black Type"		QGO2315K	Mode Select Button-A "Black Type" (⟲)	G 41	QGO2314
G 5-2	QMF2327	Button Retainer Plate	G 18	QGO2316	Mode Select Button-B (for S301) "Silver Type" (⟲)	G 42	QGO2307R
G 5-3	QGO2344	D.M.S ([1]—[12]) Button		QGO2316K	Mode Select Button-B (for S301) "Black Type" (⟲)	G 43	QGO2307D
G 5-4	QGO2308	Function Button	G 19	QGO2317	Mode Select Button-C "Silver Type" (⇄)	G 44	QGO2307H
G 5-5	QGO2345	Counter Reset Button		QGO2317K	Mode Select Button-C "Black Type" (⇄)	G 45	QGO2346
G 5-6	refer to D335	Mechanism Illuminate L.E.D	G 20	QMB1429	Button Bushing	G 46	QTS1635
G 6	QGL1190	Meter Filter "Silver Type"	G 21	QBC1473	Button Spring	G 47	QMA4613
			G 22	QYF0697	Cassette Holder "Silver Type" Assembly	G 48	QKJ0608
				QYF0697K	Cassette Holder "Black Type" Assembly	G 49	QKJ0725
			G 23	QBP1925	Holder Spring	G 50	QGK3355
			G 24	QBN1961	Eject Spring	G 51	QTH1184
			G 25 [D][B][A]	QJT1079	Nylon Coupler	G 52	QTS1629
			G 26	QYF0627	Dumper Gear Assembly	G 53	QSiFM008F
						G 54	QMK2100
						G 55	QMA4741
						G 56	QMA4740
						G 57	QKJ0683
						G 58	QMA4742
						G 59	QTS1625
						G 60	QMA4614
						G 61	QMA4624
						G 62	QMA4679

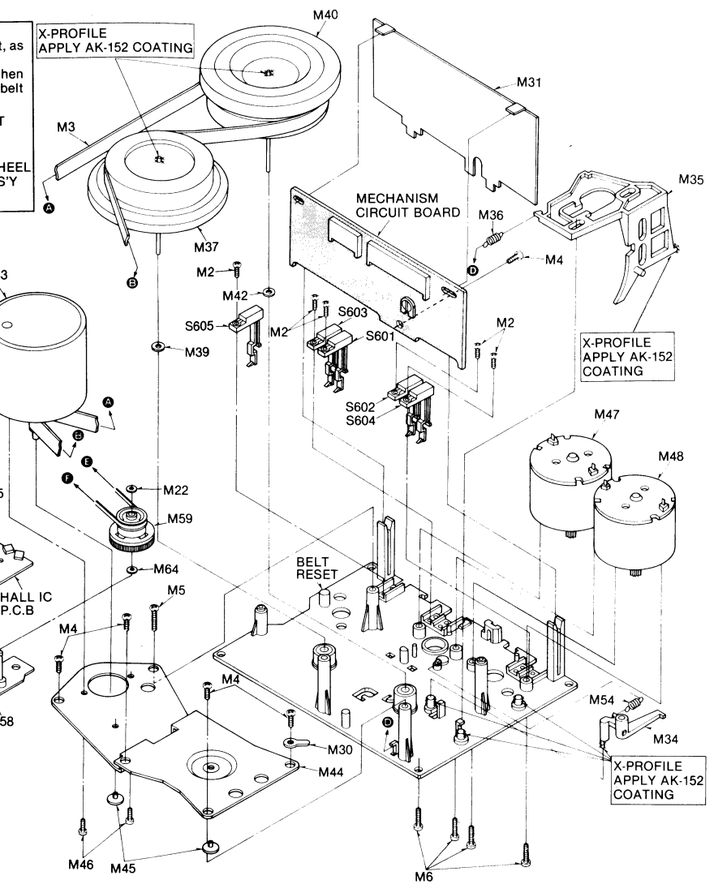

Part No.	Part Name & Description	Ref. No.	Part No.	Part Name & Description
QTD1315	Cord Clamper	M 51-1	QBN1994	Click Spring
QML4026	Obstruction Lever	M 51-2	QBP1993	Head Thrust Spring
QMR2097	Eject Rod	M 51-3	XTN2 + 4B	Tapping Screw ⊕2 × 4
QBT1947	Eject Rod Spring	M 51-4	QBC1470	Head Spring
QXF0221	Flywheel (R) Assembly	M 51-5	QHQ1352	Screw
QBW2116	Washer (2.4φ)	M 52	QXK2855	Head Base Plate Assembly
QXF0220	Flywheel (L) Assembly			
QBW2117	Washer (2.7φ)	M 53	QXL1654	Pinch Roller Arm (L) Assembly
QXU0331	Capstan Motor Assembly (with Motor Governor P.C.B.)	M 53-1	QBN1992	Pinch Roller Spring (L)
		M 54	QBT1962	Obstruction Lever Spring
QMA4619	Flywheel Holding Plate	M 55	QXL1655	Pinch Roller Arm (R) Assembly
QMZ1315	Flywheel Thrust Retainer			
XSN26 + 3	Screw ⊕2.6 × 3	M 55-1	QBN1993	Pinch Roller Spring (R)
QXU0332	FF/REW Motor Assembly	M 56	QDB0253	Pulley Belt
QXU0333	Drive Motor Assembly	M 57	QZE0063	End Sensor
QXG1076	Center Gear Assembly	M 58	QXA1432	Magnet Pulley Angle
QDG1307	Center Gear	M 59	QXP0632	Magnet Pulley Assembly
QBW2007	Washer (2.5φ)	M 60	QML4078	Switch Lever
QBH0151	Spacer	M 61	QBN2030	Switch Lever Spring
QBT1742	Head Base Plate Spring	M 62	QMH2107	Wire Clamper
QXV0195	Rotary Head Assembly (Record/Playback Head)	M 63	XTN26 + 8B	Tapping Screw ⊕2.6 × 8
		M 64	QBW2059	Poly Washer φ2.1
		M 65	XTN26 + 4B	Tapping Screw ⊕2.6 × 4

CABINET PARTS LOCATION

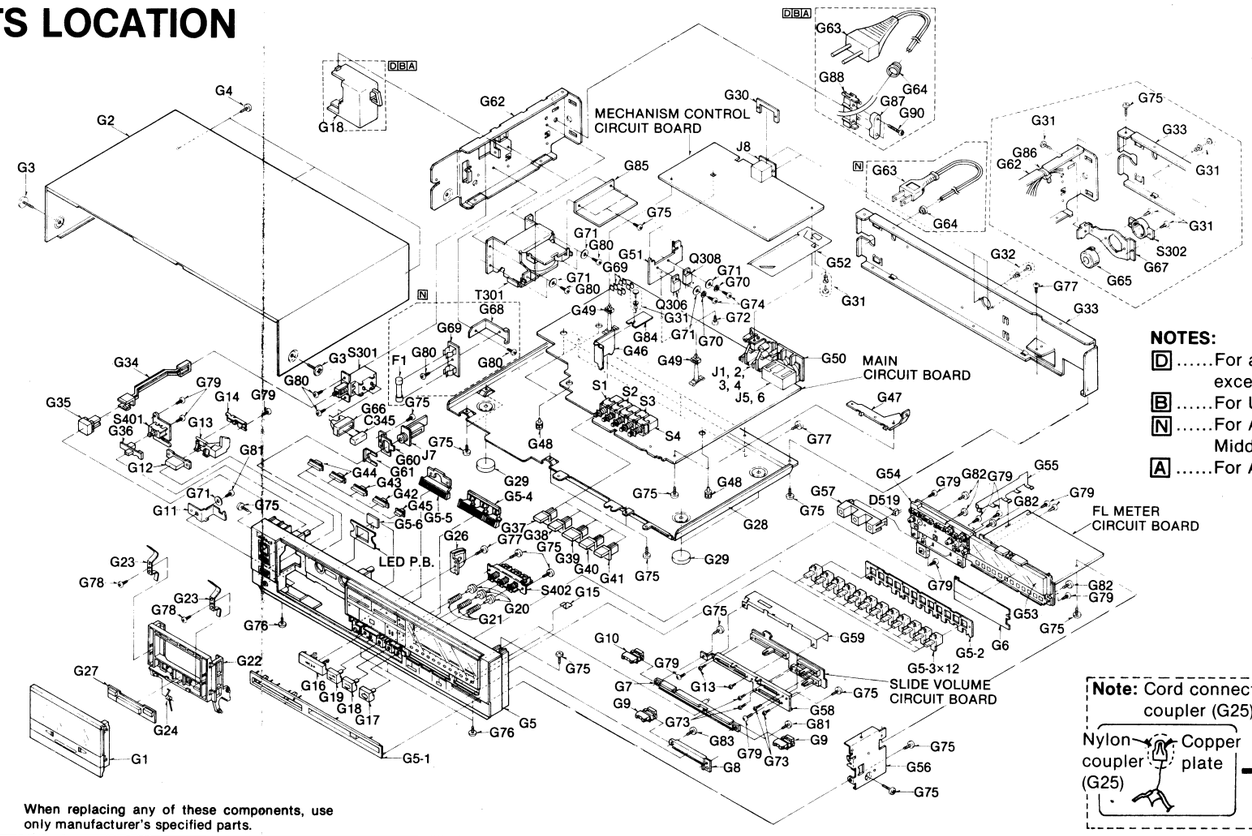
MECHANISM CONTROL
CIRCUIT BOARD
MAIN
CIRCUIT BOARD
FL METER
CIRCUIT BOARD
LED P.B.
SLIDE VOLUME
CIRCUIT BOARD
G63
G88
G64
G87
G90
G30
G75
G31
G33
G86
G62
G63
G64
G31
S302
G67
G65
G32
G77
G33
G18
G62
G4
G2
G3
G85
J8
G75
G71
G80
G51
Q308
G71
G69
G71
G70
G80
G74
G52
G31
G49
Q306
G31
G72
G84
G71
G70
G46
G49
G50
J1, 2, 3, 4
J5, 6
S1
S2
S3
S4
G47
G77
G48
G28
G29
G57
D519
G54
G79
G82
G79
G55
G82
G79
G53
G6
G5-2
G5-3×12
G59
G10
G7
G13
G9
G73
G58
G81
G9
G83
G8
G73
G56
G5
G76
G5-1
G1
G24
G27
G22
G78
G23
G78
G23
G76
G16
G19
G18
G17
G21
G20
S402
G15
G40
G41
G39
G38
G37
G77
G26
G5-4
G5-5
G5-6
G45
G42
G43
G44
G61
G60
J7
G29
G75
G81
G12
G11
G71
G75
G36
S401
G13
G14
G79
G35
G34
G79
G80
G3
S301
F1
G80
G80
G69
T301
G68
G66
C345
G75
G75
G48
G77
G28
G29
G75
G75
G75

SERVICE NEWS

Panasonic Service
Deutschland GmbH

An alle Filialen
Kundendienstzentralen
Autorisierten Fachhändler
Serviceberater/Schulung
QC/EK/VK Techn.Klarstellung

Nr.: 318	Datum: 25.Februar 1985 WK/MM 4/85
THEMA	TEXT

RS-B 58 R

RS-B 78 R
Statik-Geräusche

Symptom: Beanstandung von lauten Knackgeräuschen bei Wiedergabe im Abstand von 3 - 10 Minuten oder Knistergeräuschen.

Grund: Während z.B. der Heizperiode oder geringer Luftfeuchtigkeit kann es vorkommen, daß laute Knackgeräusche bzw. ein Knistern hörbar wird bei der Wiedergabe. Statische Aufladung bzw. Entladung entstehen beim Bandtransport:

a) A/W-Kopf
b) an der Bandandruckrolle
c) Vermittlungsrädchen

Abhilfe:
1. Lt. Skizze eine Drahtverbindung herstellen.
2. Erneuerung der Bandandruckrolle durch die geänderte Version
   ET-Nr. pinch roller links QXL1809
   pinch roller rechts QXL1808
3. Fetten der Vermittlungsrädchen
   ET-Nr. QZZ0118

Zu Nr. 2
pinch roller links
QXL1809

pinch roller rechts
QXL1808

Zu Nr. 3
QZZ0118

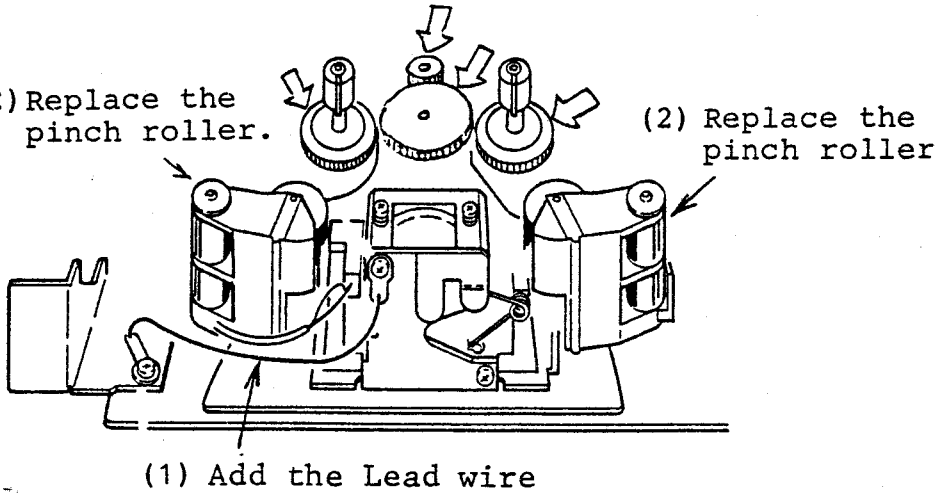

Panasonic Service
Deutschland GmbH